Webasto
Feel the drive

Coolant Heater

Thermo 90 ST B (Gasoline)
Thermo 90 ST D (Diesel)

Installation Manual

- Improper installation or repair of Webasto heating and cooling systems can cause fire or the leakage of deadly carbon monoxide leading to serious injury or death.
- Installation and repair of Webasto heating and cooling systems requires special Webasto training, technical information, special tools and special equipment.
- NEVER attempt to install or repair a Webasto heating or cooling system unless you have successfully completed the factory training course and have the technical skills, technical information, tools and equipment required to properly complete the necessary procedures.
- ALWAYS carefully follow Webasto installation and repair instructions and heed all WARNINGS.
- Webasto rejects any liability for problems and damage caused by the system being installed by untrained personnel.

Contents Page

1. Safety and General Information

1.1 Warning Symbols in this Installation Manual

The purpose of safety symbols is to attract your attention to possible hazardous conditions. This manual uses a series of symbols and signal words which are intended to convey the level of importance of the safety messages. The progression of symbols is described below. Remember that safety messages by themselves do not eliminate danger and are not a substitute for proper accident prevention measures.

⚠ DANGER — Indicates an imminently hazardous situation which, if not avoided, WILL result in death or serious injury.

⚠ WARNING — Indicates a potentially hazardous situation which, if not avoided, COULD result in death or serious injury.

⚠ CAUTION — Indicates a potentially hazardous situation which, if not avoided, MAY result in minor or moderate injury or property damage. It may also be used to alert against unsafe practices.

OR — These symbols are used to alert the installer to important or useful information about proper installation of the equipment.

1.2 General Information

Webasto Product North America, Inc. is pleased to provide this installation manual for use with this new heater. When installed in accordance with the guidelines stated in this manual, you can expect to provide years of trouble-free, enjoyable operation for your customer.

This manual represents our latest effort to produce the best technical documentation possible.
In our efforts towards continuous, ongoing product improvement, we encourage our customers to write to us with their comments or criticisms concerning this manual or product.

Please write to us at:

Webasto Product North America, Inc.
Technical Documentation Group
15083 North Road
Fenton MI 48430

You are also invited to fill out our online questionnaire concerning our technical documentation and web site at:

www.techwebasto.com

If you have any immediate questions concerning this manual, the installation procedures within or the product itself, please call us at:

(800) 860-7866 or send a fax to: (810) 593-6001

2. Regulation for Installation in the Vehicle

Read this installation manual in its entirety before installing this equipment.

2.1 Scope

2.1.1 Subject to the provisions of paragraph 2.1.2, internal combustion heaters must be installed in accordance with the requirements contained in this Annex.

2.1.2 In the case of vehicles and trailers with heaters for liquid fuel, it is presumed that these vehicles comply with the requirements in this Annex.

2.2 Position of the Heater

2.2.1 Parts of the vehicle body and other components in the immediate vicinity of the heater must be protected against excessive heat and the danger of contamination by fuel or oil.

2.2.2 The internal combustion heater must not pose a fire hazard even when overheated. This requirement is deemed to have been met if care is taken during installation to ensure an adequate distance from all parts, as well as adequate ventilation and if fire-resistant materials or heat shields are used.

2.2.3 For passenger carrying vehicles such as shuttle busses, transit busses, and coaches, the heater must not be installed in the passenger cabin. A device in a sealed cover, which also meets the requirements set out in paragraph 2.2.2, may be used, however.

2.2.4 The model/ Serial plate or a duplicate thereof (duplicate model/ Serial plate) must be fitted in such a way that it is still clearly legible when the heater has been installed in the vehicle.

2.2.5 When positioning the heater, all reasonable precautions must be taken to minimize the risk of personal injury or damage to items in the vehicle.

2.2.6 A clearly visible indicator within the user's field of vision must show when the heater is switched on or off.

2.3 Fuel Supply

2.3.1 The fuel filler neck must not be located in the passenger compartment and must have a tightly fitting cap to prevent any fuel leaks.

2.3.2 The type of fuel and the fuel filler neck must be clearly identified on heaters for liquid fuel, for which the fuel supply is separate from the fuel supply for the vehicle.

2.3.3 A sign must be affixed to the fuel filler neck warning that the heater must be switched off before refuelling. An identical warning must also be included in the manufacturer's operating instructions.

2.4 Exhaust System

2.4.1 The exhaust outlet must be positioned in such a way that exhaust fumes cannot get into the interior of the vehicle through ventilation devices, hot-air inlets or open windows.

2.5 Combustion Air Inlet

2.5.1 The air for the combustion chamber of the heater must not be extracted from the passenger cabin of the vehicle.

2.5.2 The air inlet must be positioned in such a way that it cannot be obstructed by other objects.

2.6 Water Inlet

2.6.1 The supply of water to be heated must be protected against freezing with a suitable antifreeze additive to the required strength as directed by the manufacturer. The supply of water to be heated must be uncontaminated by corrosive compounds and other impurities.

2.6.2 The inlet line must be protected from damage.

2.7 Hot Water Outlet

2.7.1 Hot water lines within the vehicle must be positioned or protected in such a way as to exclude all risk of injury or damage caused by direct contact.

2.7.2 The water outlet line must be protected so that it cannot be obstructed by other objects or the flow of water through the lines be blocked.

IMPORTANT!
Failure to follow the installation instructions and the notes contained therein will lead to all liability being refused by Webasto. The same applies if repairs are carried out incorrectly or with the use of parts other than genuine Webasto service parts. This will result in the invalidation of the type approval for the heater and therefore of its homologation / type licence.

3. Purpose / Version

3.1 Purpose of the Coolant Heater

Thermo 90 ST coolant heaters are used in connection with the vehicle's own heating system

- to heat the cab,
- to defrost vehicle windows and
- to preheat water-cooled engines,
- to heat boats and motor-homes (recreational vehicles)

The water heater operates independently of the engine and is connected to the cooling system, the fuel system and the electrical system of the vehicle.

3.2 Versions

3.2.1 Thermo 90 ST version

Thermo 90 ST gasoline

Water heater for "gasoline" fuel

Thermo 90 ST diesel

Water heater for "diesel" fuel

The water heaters are designed for 12 V (Thermo 90 ST gasoline) and for 12 or 24 V (Thermo 90 ST diesel)

4. Installation

IMPORTANT!
The water heater must be installed outside the passenger cabin.

The requirements of the latest version of "Hazmat" must also be observed for the installation of the heater into vehicles used to transport hazardous substances.

4.1 Installation site / Installation position

The heater must be installed in as low a position as possible to allow the heater and circulating pump to be bled automatically. This is particularly important as the circulating pump is not self-priming.

The installation must be performed in accordance with the installation instructions provided in this manual.

NOTE:
If the vehicle manufacturer has issued specific installation instructions, they must be followed.

4.2 To install the heater

The heater must be secured with at least three M8 screws. The screws must be tightened with a torque of 18 Nm. (13.3 lb-ft).

4.3 Model plate

The model plate must be positioned so that it cannot be damaged and must be clearly legible when the heater is installed (otherwise a duplicate model plate must be used).
Inapplicable years must be erased from the model plate.

4.4 CE mark

The Thermo 90 ST water heater carries the CE mark since it complies with the regulations in force. The heater satisfies the requirements of class A. As a result, the following supplement applies:

⚠WARNING ***This is a class A device. This device may induce radio interference in residential areas; in this case, the owner may be required to undertake appropriate measures.***

As a rule, installation in the engine compartment represents sufficient screening. Please contact the Webasto hotline in the event that radio interference occurs nevertheless.

5. Installation Location Examples

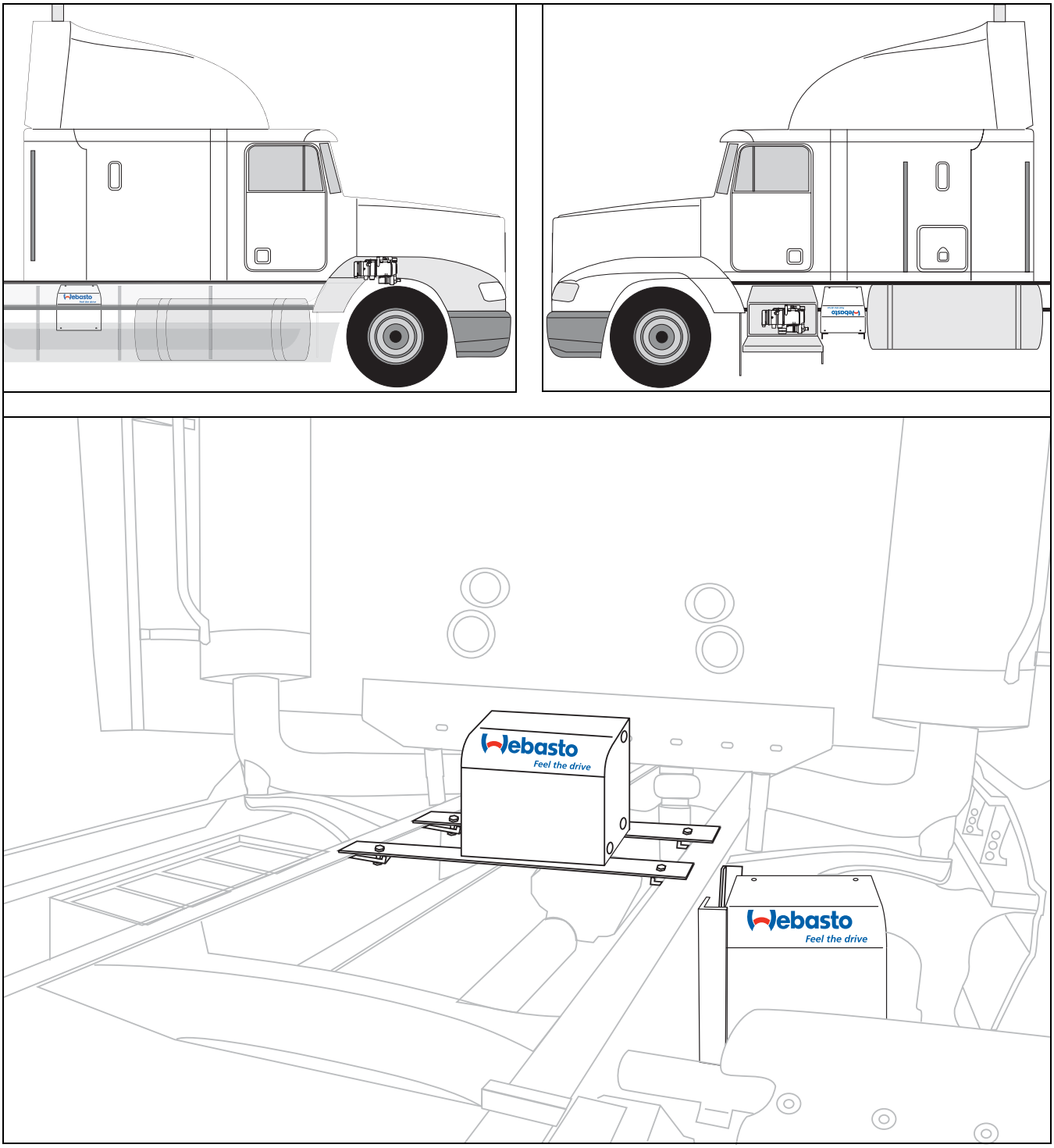

Figure 1: Installation locations

6. Mounting the Heater to the Vehicle

6.1 Allowable Mounting Positions

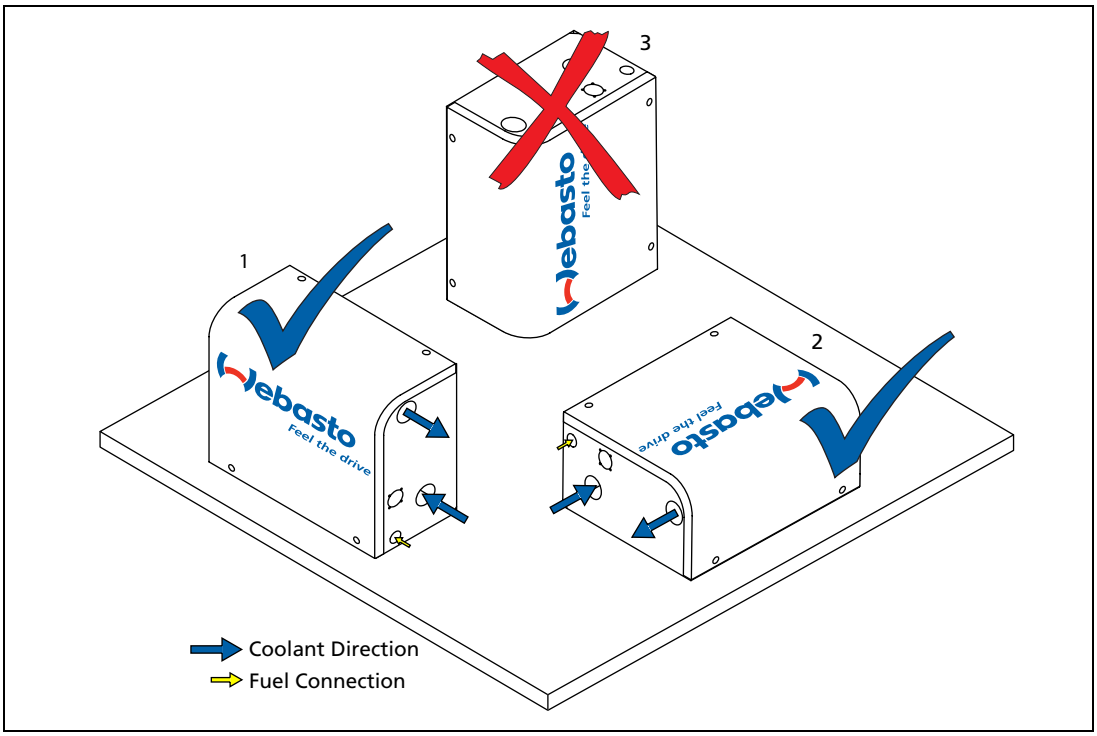

Figure 2: Allowable enclosure kit mounting positions, 1 and 2 only. Position 3 is not permissible.

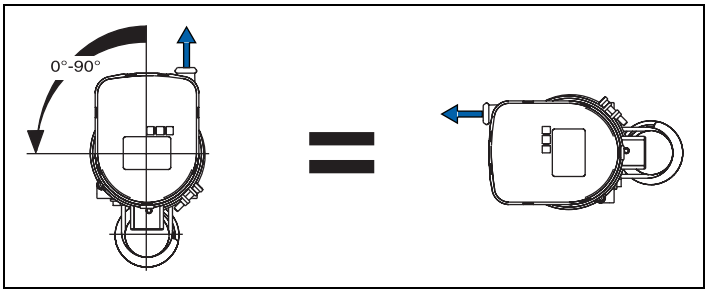

Figure 3: Permitted installation positions for the Thermo 90 ST heater - <u>Enclosure and Compact Kits</u>

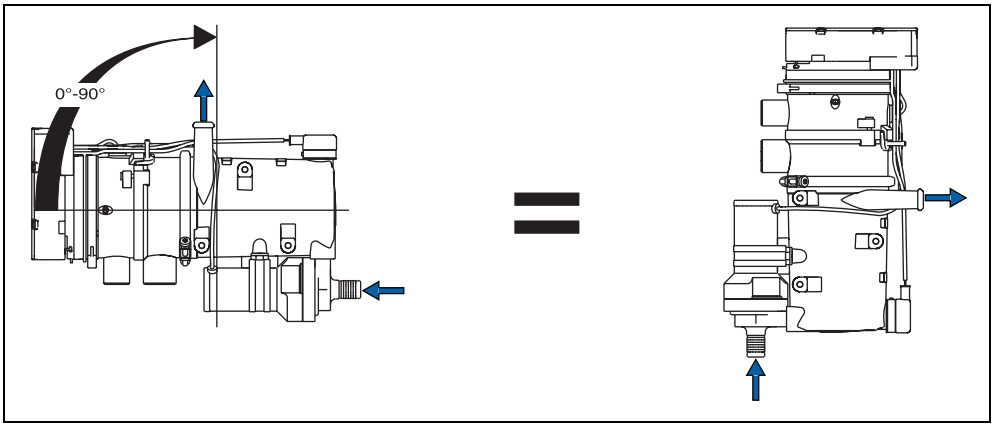

Figure 4: Permitted installation positions for the Thermo 90 ST heater - <u>Compact Kits only</u>

CAUTION Do not drill holes through top or bottom of vehicle frame flanges!
Do not weld vehicle frame or flanges!

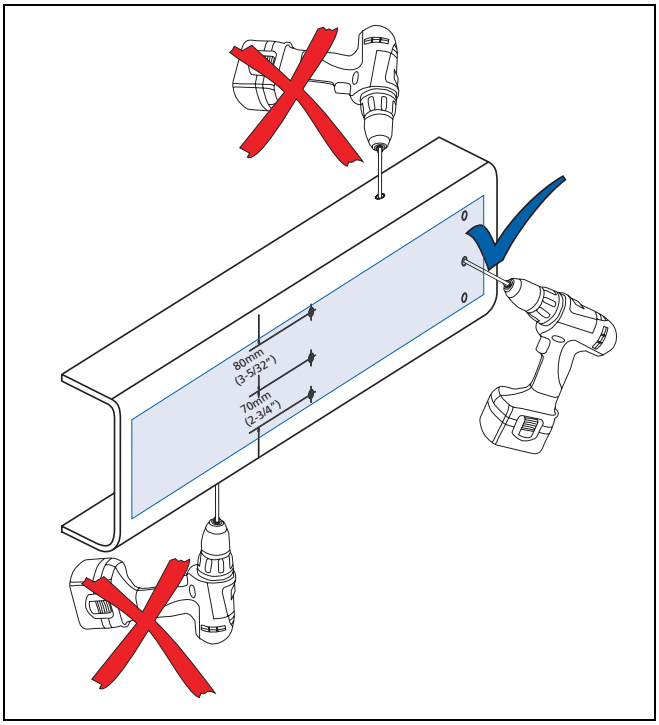

Figure 5: Drill frame within the shaded area only!

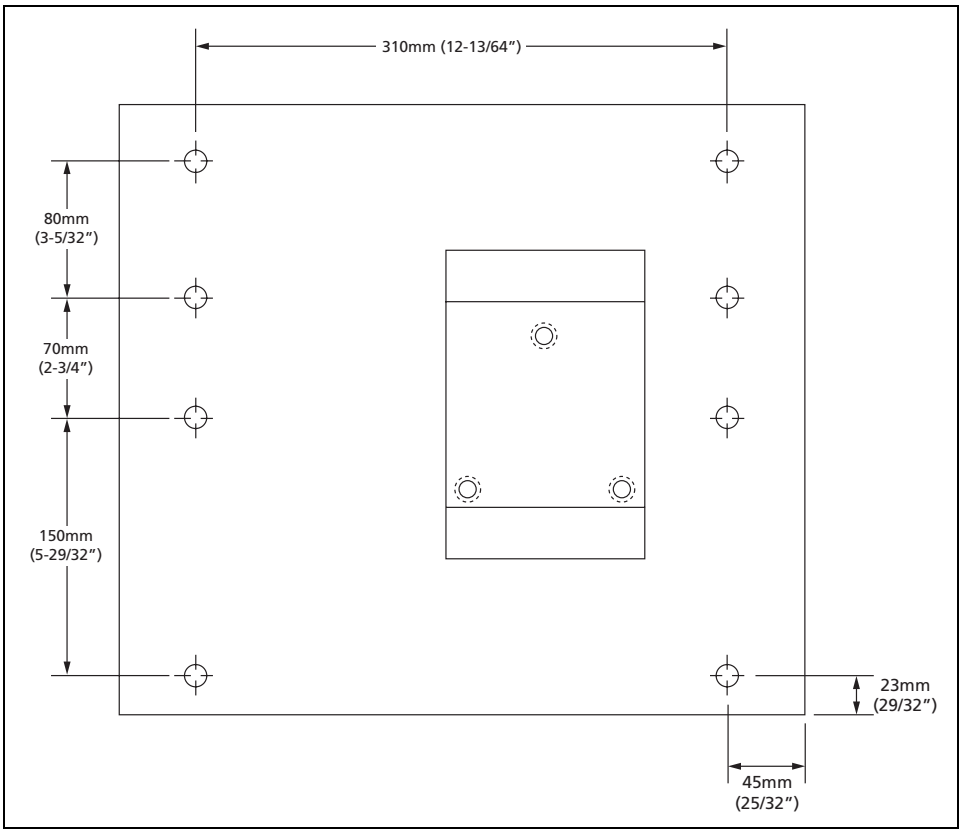

Figure 6: Mounting heater enclosure via back wall (Vertical or horizontal mounting)

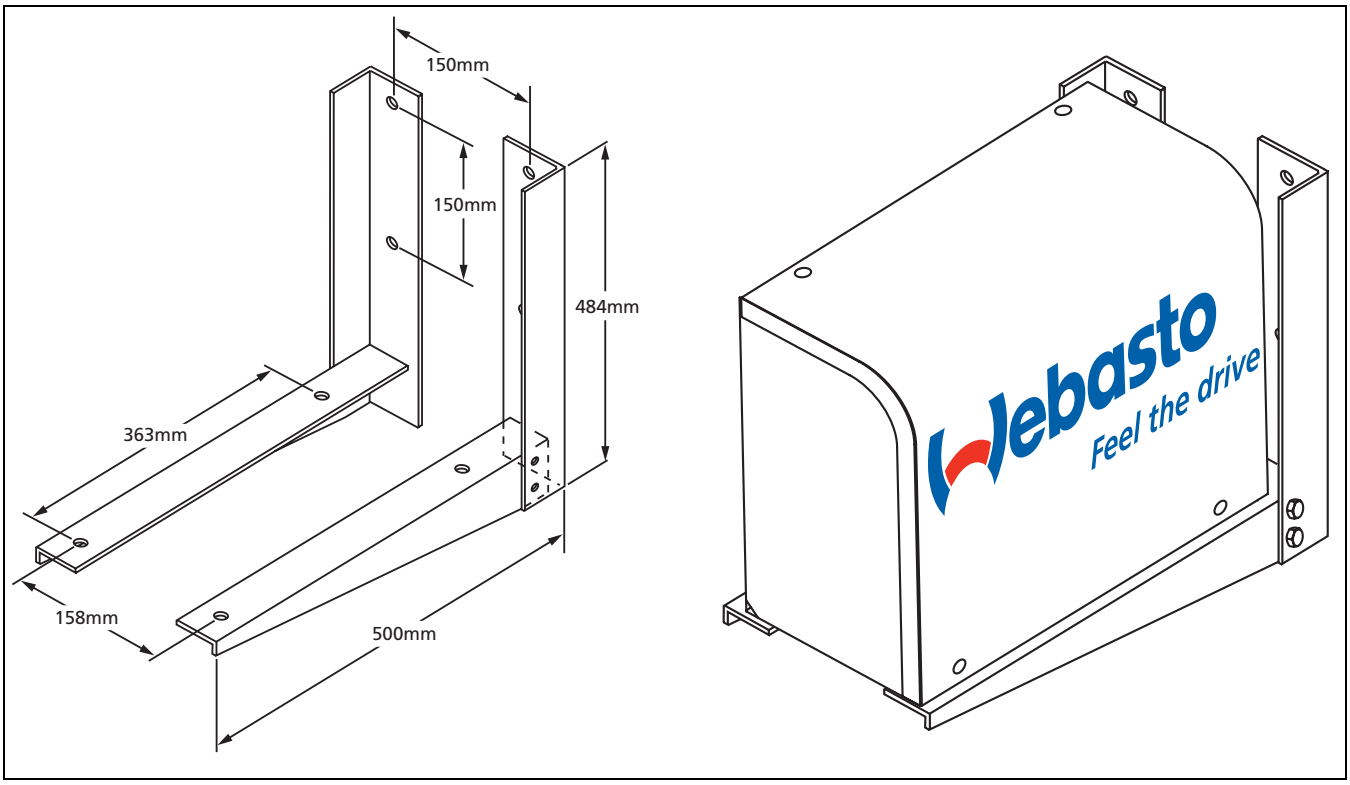

Figure 7: Optional perpendicular mounting with bracket kit P/N 905822 or P/N 905838 (Freightliner style)

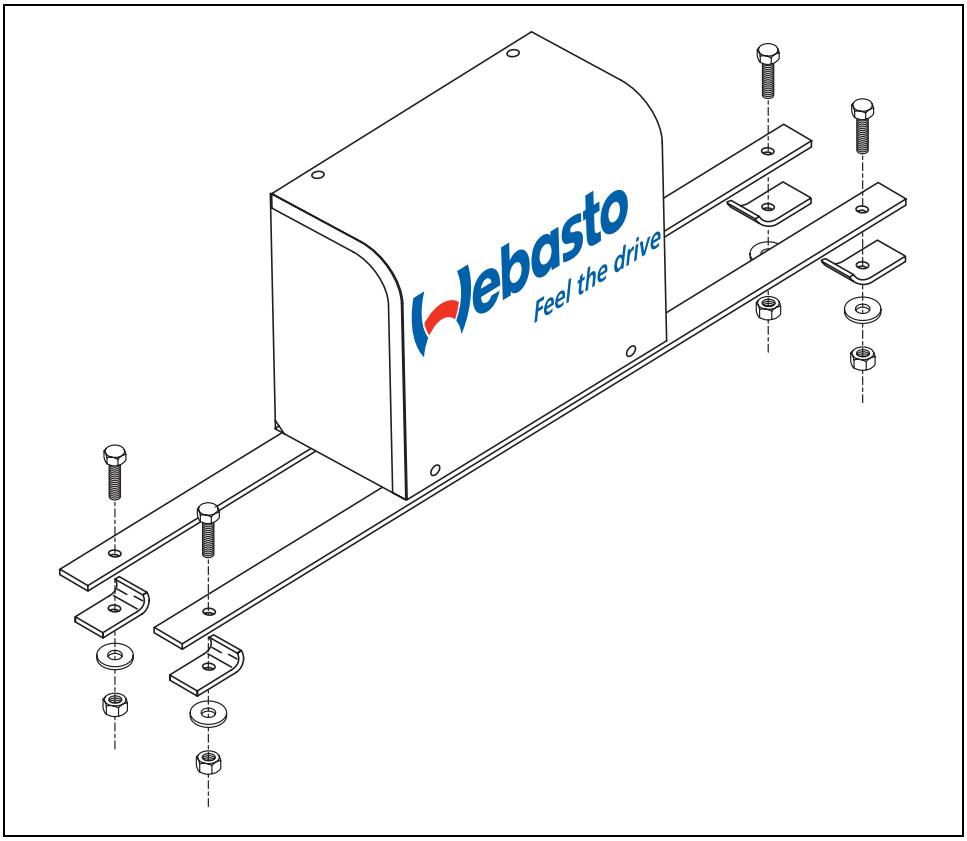

Figure 8: Optional cross-frame mounting bar/clamp kit P/N 600055 (Also see Figure 1)

7. Connection to the Vehicle Cooling System

7.1 General Information

The heater is connected to the vehicle cooling system as shown in Figures 10 through 15, depending on the type of heating system the vehicle is equipped with. The system must contain at least 6 litres (1.6 US Gal.) of coolant. The system must be filled with an antifreeze and water mixture as recommended by the vehicle manufacturer. Coolant flow throughout the system must be maintained in all operating conditions.

If desired, shut-off valves can be installed at the engine inlet and outlet connections of the coolant heater circuit, although, shut-off valves are not mandatory. All valves should remain open throughout the year.

IMPORTANT!
To maintain optimum heater condition, periodically run heater for ten or more minutes monthly during the off-season. Ensure any shut-off valves are open before operating the coolant heater.

- Use 1/2" or larger NPT pipe fittings for hose connections at engine.
- Use good quality, heavy duty 3/4" ID. coolant hose for the coolant heater circuit.
- Hoses must be installed without kinks and bends which may restrict coolant flow.
- To ensure proper bleeding of air, keep hoses rising if possible. Avoid "goose necks" to prevent trapping air.
- Hoses must be supported where required to prevent chaffing and damage from vehicle components.
- Hose connections must be secured by hose clamps to prevent them from slipping off.
- Coolant heater flow direction should match the flow direction of the engine's coolant circulation system.

IMPORTANT!
The hose clamps must be tightened with a torque of 4 Nm. (35 lb.-in.)
The use of silicone hose requires special hose clamps.

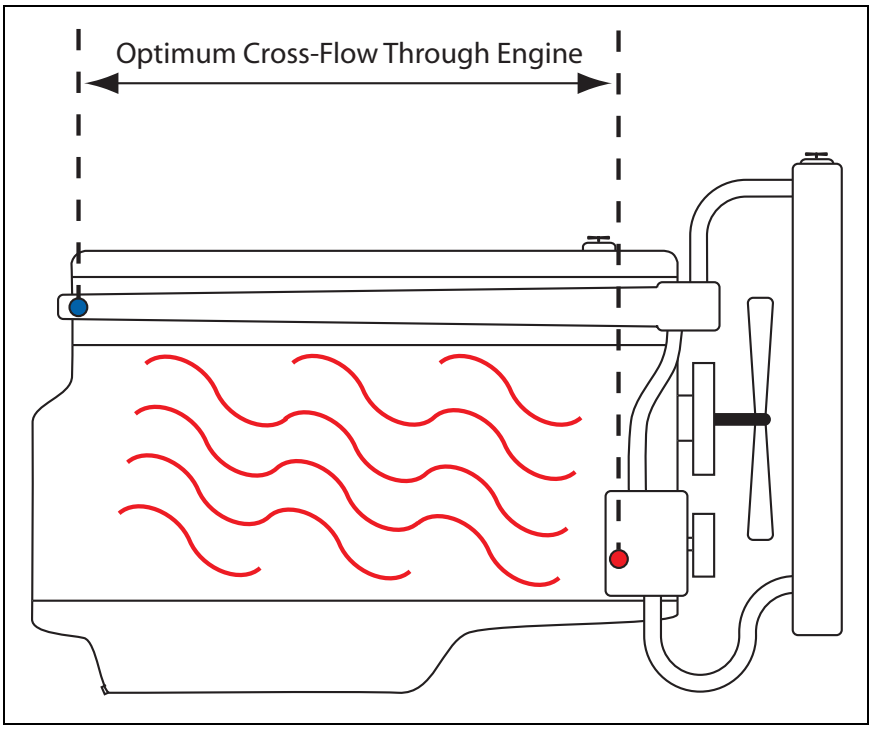

Figure 9: Ensure optimum cross-flow

Separate the heater supply and return connections at the engine as far apart as is practical for optimum engine heating and heater performance. See Figure 9.

The cooling system must be bled carefully before using the heater for the first time or after replacing the coolant.

Proper venting of trapped air can be identified by the circulating pump operating almost silently. Poor bleeding may cause the resetting temperature limiter to trip whilst the heater is operating.

7.2 Various Plumbing Configurations

Select the appropriate plumbing configuration according to the customers requirements and the vehicle system type.

Figure 10 illustrates an engine preheat / boost heat configuration.

Figures 11 through 14 illustrate configurations for bunk heat and engine preheat / boost heat.

Figure 15 illustrates a system for vehicles with continuous fan operation or high amperage heat exchanger fan designs. In this case, the addition of a low amperage draw, auxiliary heat exchanger system is recommended. Webasto offers a complete kit under part number 905670 for this application.

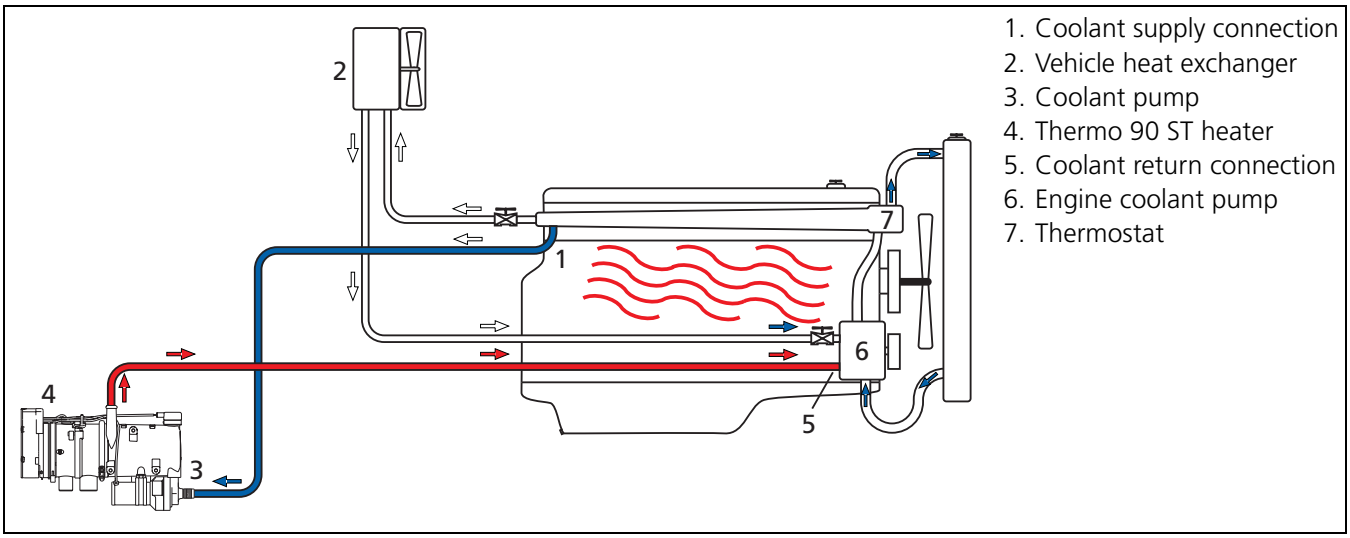

Figure 10: System configured for engine pre-heating and boost heating.

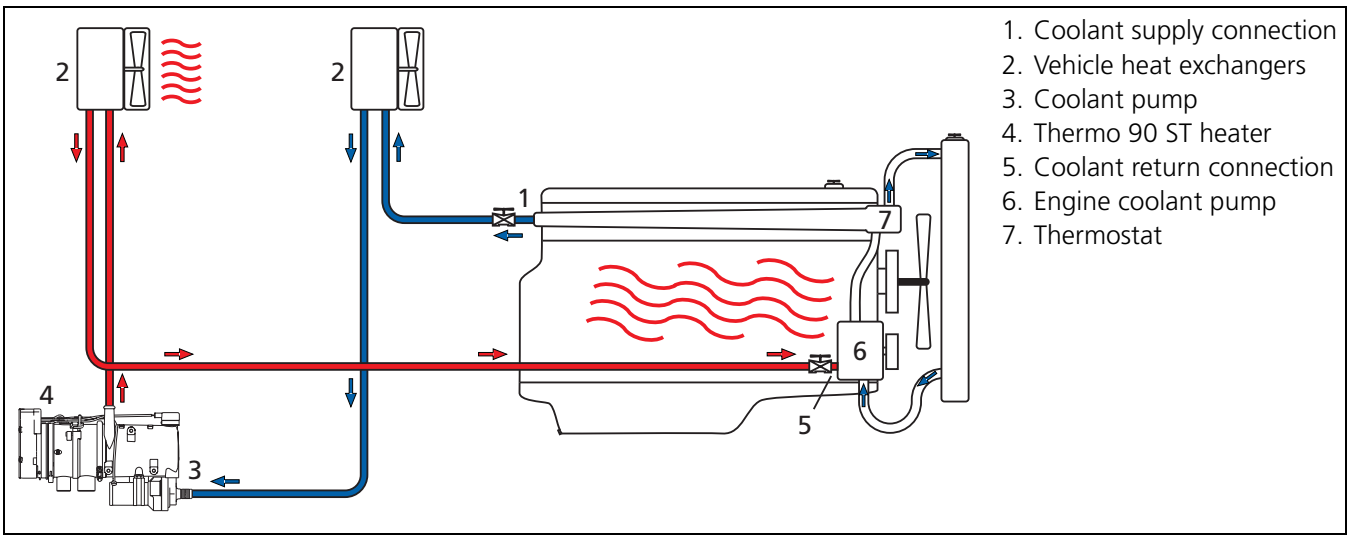

Figure 11: System configured in a “series” fashion with both heat exchangers.

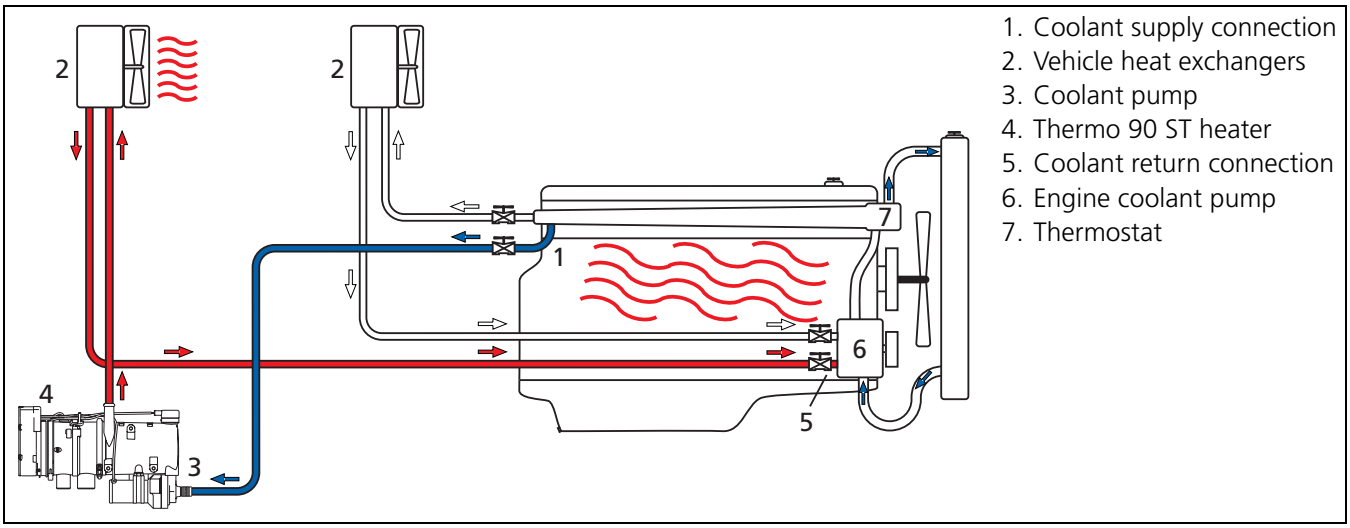

Figure 12: System configured in series with rear heat exchanger in a "dual" circuit heating system.

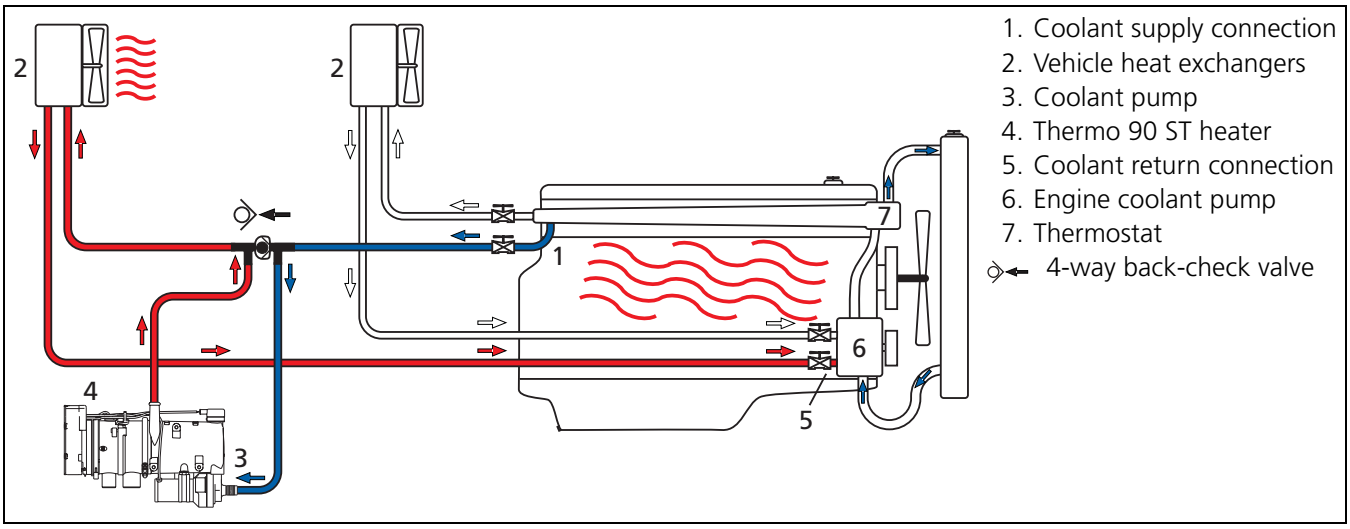

Figure 13: System configured in the rear heat exchanger circuit using an optional 4-way back-check valve.

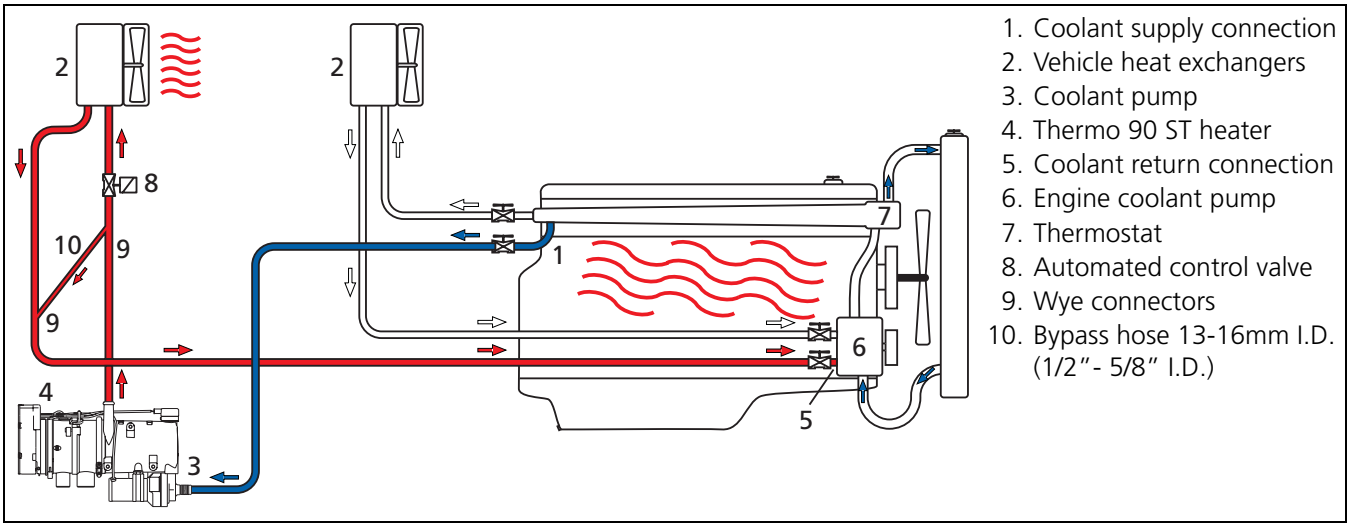

Figure 14: System configured with a bypass circuit within the rear heat exchanger circuit where an automated flow control valve is installed. Bypass is required in the event the valve is closed during heater operation.

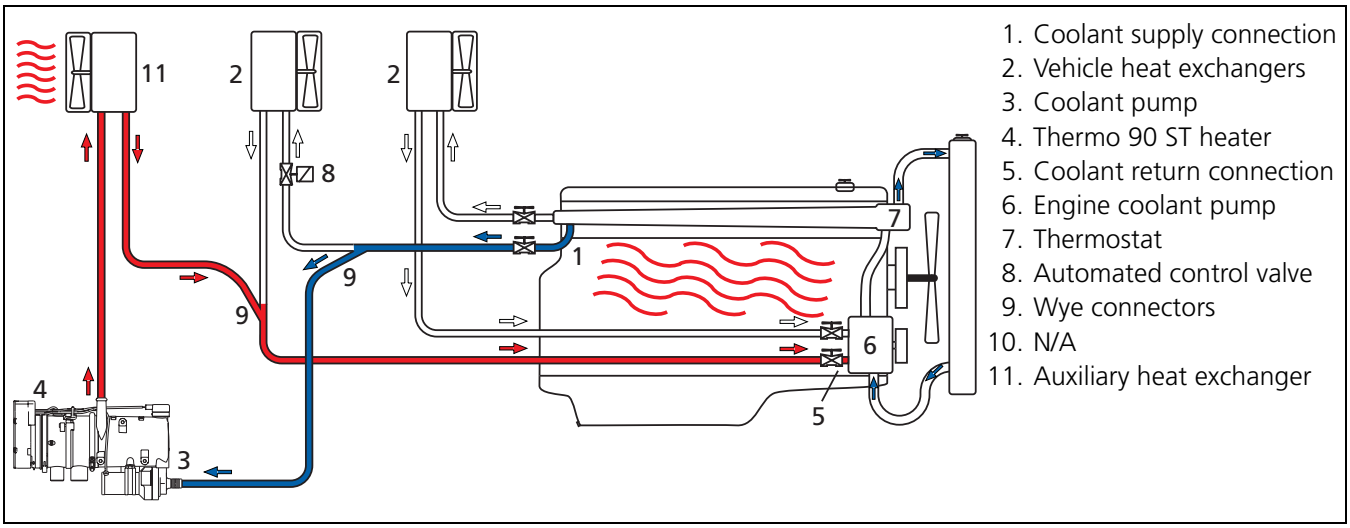

Figure 15: System configured with an additional auxiliary heat exchanger connected in "series / parallel" with rear heat exchanger circuit. (Recommended for Kenworth AeroCab & Studio Sleeper built before July 1994, Ford Aeromax, and Navistar CEO & Conventional Cab.)

7.3 Additional Heating System Accessories

Webasto offers a line of Sleeper Pack Interface Wiring Kits that work with many OEM HVAC systems. These kits simplify the installation and pairing of the Webasto coolant heater with the vehicle's own bunk heating system.

The Sleeper pack interface takes control of the bunk heater during coolant heater operation. With the coolant heater off, the bunk heater system control is returned to the vehicle's control panel.

Consult to your Webasto Sales Representative for Sleeper Pack availability by vehicle make, model and year.

8. Fuel Supply

8.1 General Information

The values for the maximum pressure at the fuel extraction point are shown in the table below and in Figure 17.

Permissible fuel inflow height H	At maximum pressure in fuel line
0.00 m (0.00 in.)	0.2 bar (2.9 PSI)
1.00 m (39.4 in.)	0.11 bar (1.6 PSI)
2.00 m (78.7 in.)	0.03 bar (0.44 PSI)
Maximum fuel intake height S	**At maximum negative pressure in the fuel tank**
0.00 m (0.00 in.)	-0.10 bar (-1.45 PSI)
0.50 m (19.7 in.)	-0.06 bar (-0.87 PSI)
1.00 m (39.4 in.)	-0.02 bar (-0.29 PSI)

The fuel is taken from the vehicle fuel tank or from a separate fuel tank. The exploded view in Figure 16 Illustrates the progression of fuel system components.

A sign must be affixed to the fuel tank's filler neck warning that the heater must be switched off before refuelling.

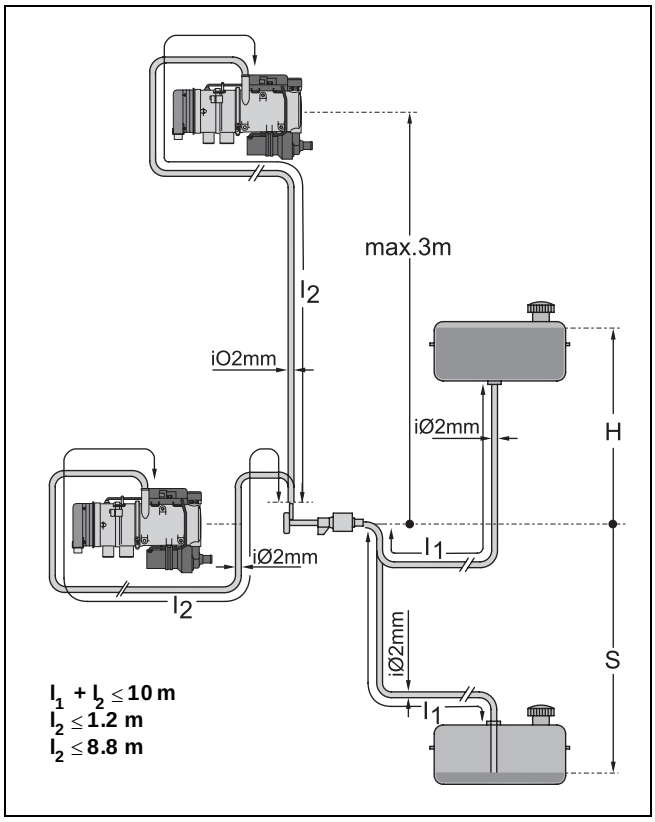

Figure 17: Fuel system parameters

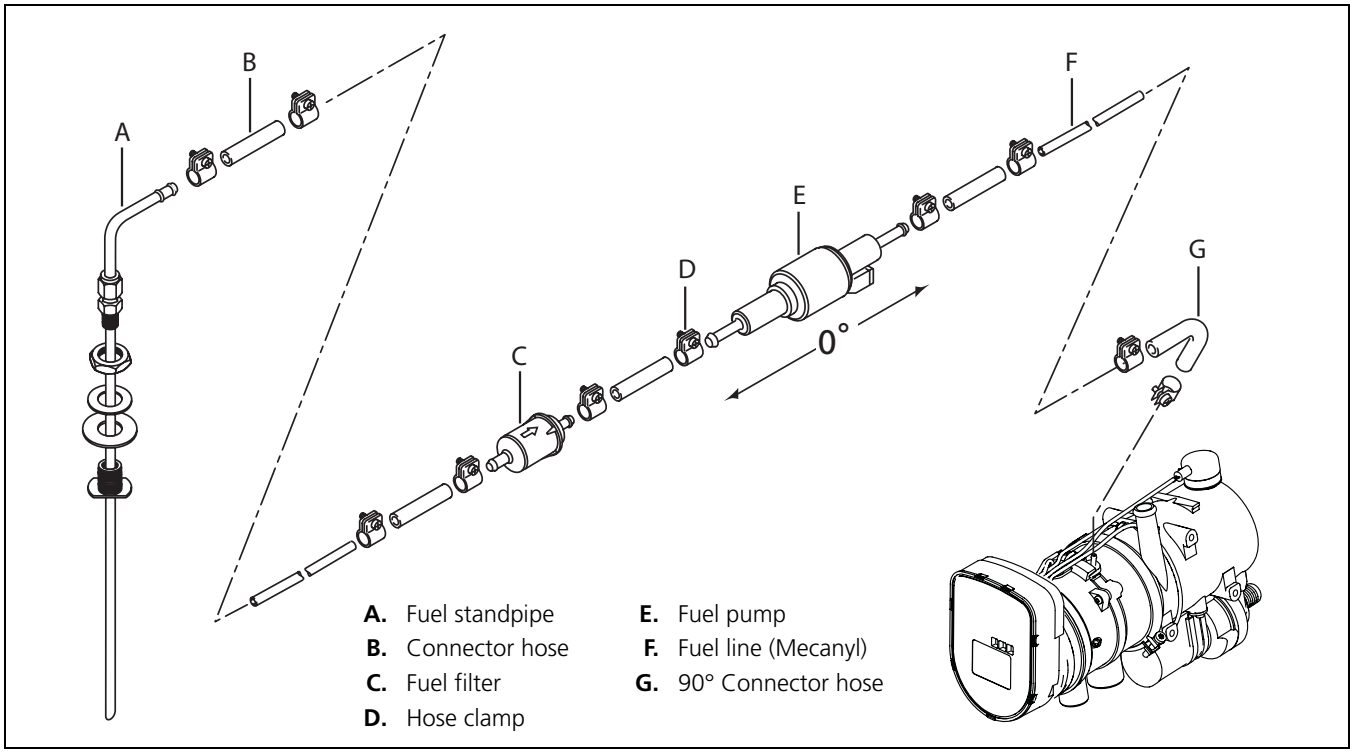

Figure 16: Fuel system components

8.2 Fuel Standpipe Installation

This separate fuel pickup precludes any effect of pressure.

Where available, a spare NPT threaded port can be utilized for the standpipe. If a spare port is not present, proceed with the following instructions under "To install the standpipe".

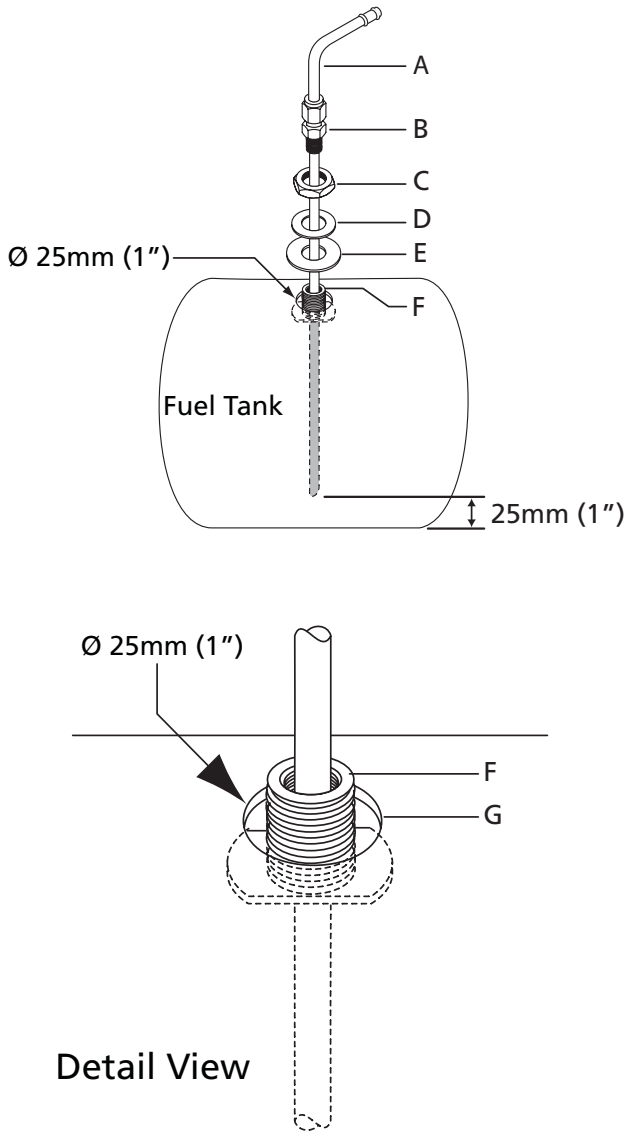

A. Fuel standpipe
B. Compression fitting
C. Hex nut
D. Metal washer
E. Rubber washer
F. Tank boss 1/4" NPT
G. 25mm (1") hole

Figure 18: Webasto fuel standpipe

To install the standpipe:

1. bore a 25mm (1") hole through top of fuel tank (item G, Figure 18).
2. remove sharp burrs and smooth edges with emery cloth.
3. determine length of standpipe when installed. End should sit at least 25mm (1") above tank bottom. Cut off excess standpipe at a 45 degree angle. Remove burrs.
4. loosely assemble items C, D, E, and F (Figure 18).
5. place sealing compound on threads of item B and thread into item F. Tighten item B completely.
6. slide standpipe into hole at angle. Slip one shoulder of item F, Figure 18 inside the hole as shown in Figure 19.

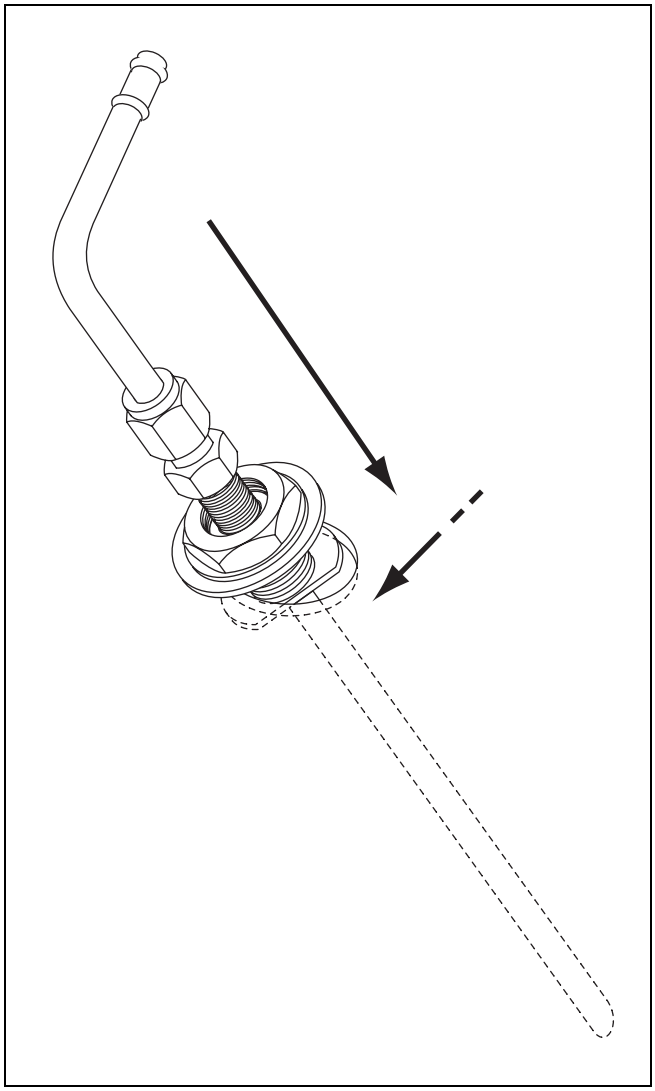

Figure 19: Standpipe installation - illustration 1

7. bring standpipe up to horizontal and insert opposite shoulder under the tank hole. See Figure 20.

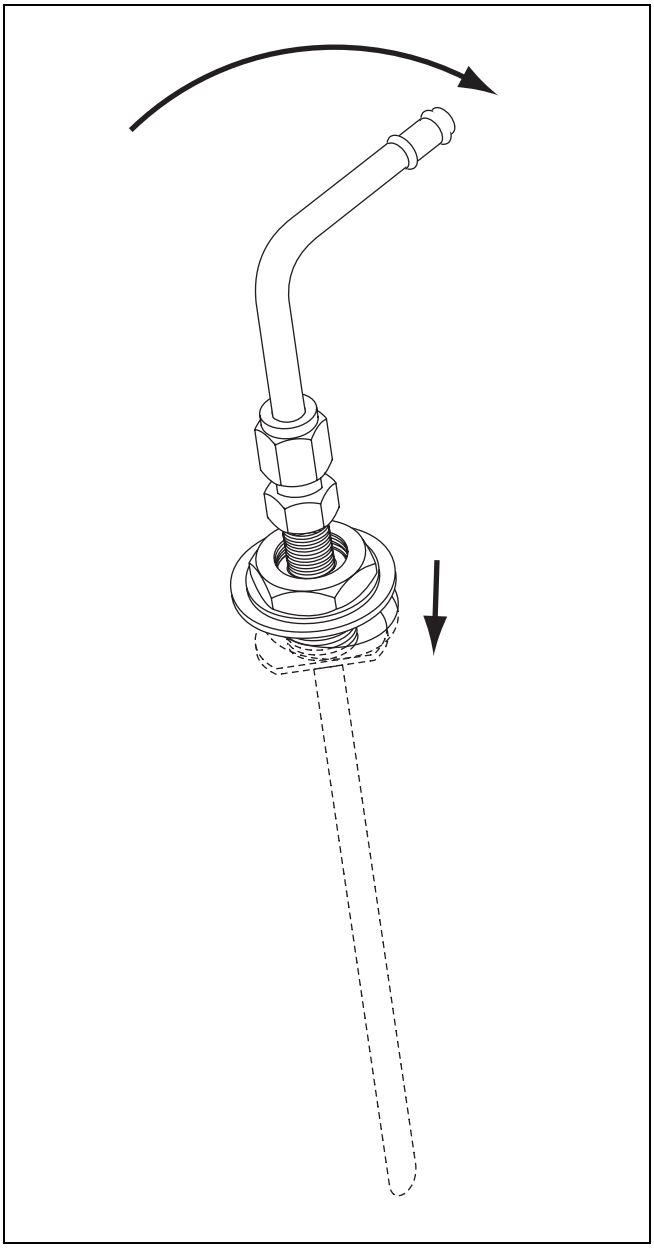

Figure 20: Standpipe installation - illustration 2

8. center standpipe in tank hole. See Figure 21.

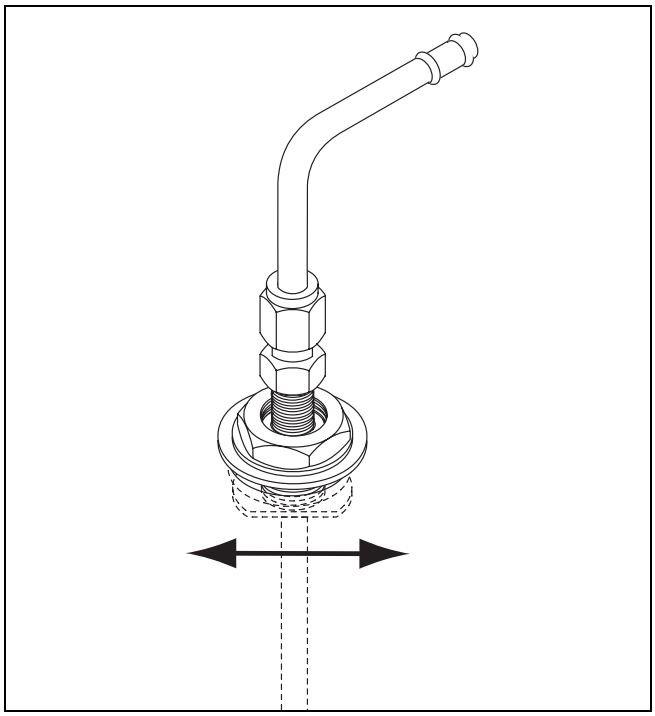

Figure 21: Standpipe installation - illustration 3

9. pull up on standpipe and tighten in place with the clamping nut (item A in Figure 22). Do not over-tighten causing rubber washer to squeeze out!

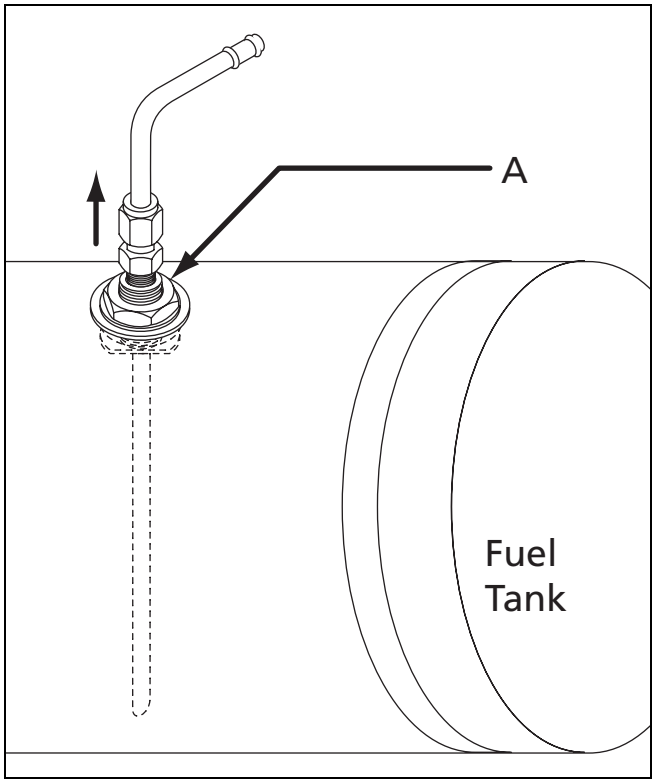

Figure 22: Standpipe installation - illustration 3

8.3 Fuel Lines

Only steel, copper and plastic lines made of plasticized, light and temperature-stabilized PA 11 or PA 12 (e.g. Mecanyl RWTL) pursuant to DIN 73378 may be used for the fuel lines.

Since the lines normally cannot be routed with a constant rising gradient, the internal diameter must not be allowed to exceed a certain size. Air or gas bubbles will accumulate in lines with an internal diameter of more than 4 mm (5/32 in.) and these will cause malfunctions whilst the heater is operating if the lines sag or are routed downwards. The diameters specified in Figure 17 will ensure that bubbles do not form.

The lines should not be routed downwards from the metering pump to the heater.

Unsupported fuel lines must be secured to prevent them from sagging. They must be installed in such a way that they cannot be damaged by flying road debris and high temperatures, i.e. close to the exhaust line.

The fuel lines must be secure at the connections using hose clips to prevent their slipping.

IMPORTANT!
Cut lines without burr and do not crush them. Do not cut fuel line with side cutting pliers!

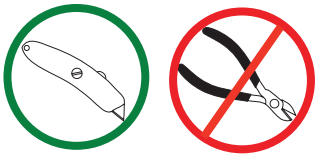

8.3.1 Connecting two fuel lines with a coupler hose

The correct procedure for connecting fuel lines with hosing is shown in Figure 23. Ensure that there are no leaks.

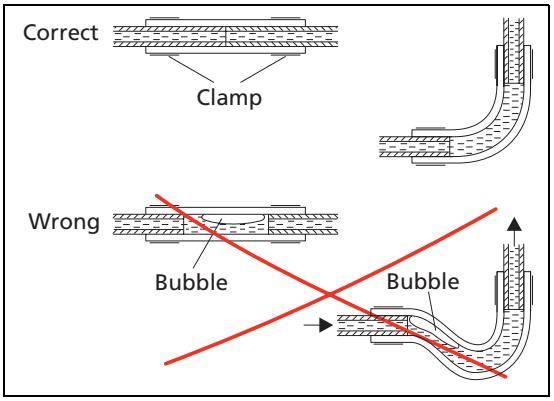

Figure 23: Fuel line / coupler hose connection

8.4 Fuel Metering Pump

The fuel metering pump is a combined delivery, metering and shut-off system and is subject to certain installation criteria (see Figures 24 and 25).

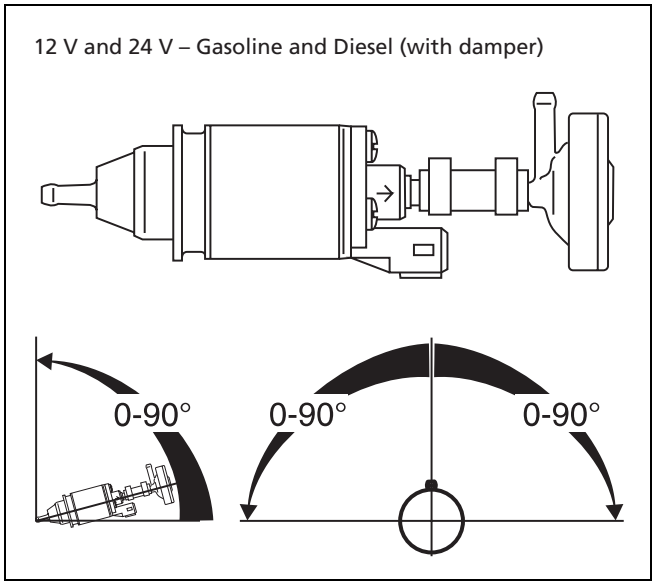

Figure 24: Fuel metering pump DP2 - installation position

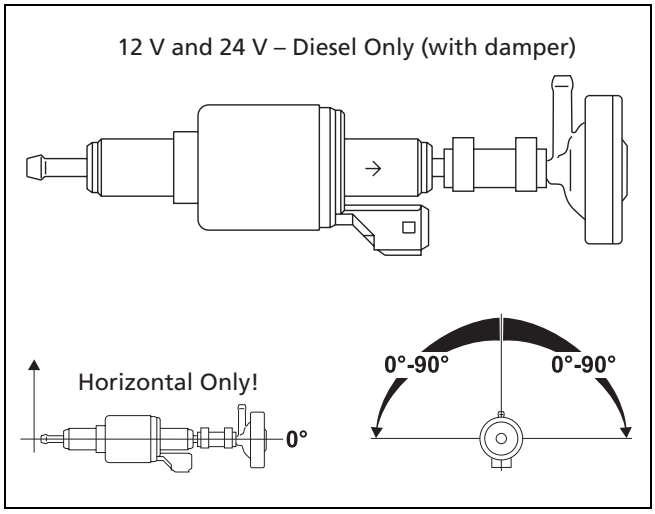

Figure 25: Fuel metering pump 30.2 - installation position

8.4.1 Installation Location

It is advisable to install the metering pump in a cool place. The maximum ambient temperature must not exceed +20 °C (68 °F) for gasoline heaters at any time during operation.

The metering pump and fuel lines must not be installed within range of the radiated heat from hot vehicle parts. A heat shield must be used if necessary.

8.4.2 Attachment

The metering pump must be secured with a vibration-damping mounting. Its installation position is limited as shown in Figure 24 and 25 in order to ensure effective automatic bleeding.

As a result of the risk of corrosion, only genuine Webasto parts may be used for the plug connections between the metering pump and the metering pump wiring harness.

8.5 Fuel Filter

Only a Webasto filter is allowed to be used if the fuel is expected to be contaminated. Install vertically if possible, however at least horizontally (check flow direction).

IMPORTANT!
Do not substitute the Webasto supplied fuel filter with a non Webasto replacement. Irregular heater operation may result.

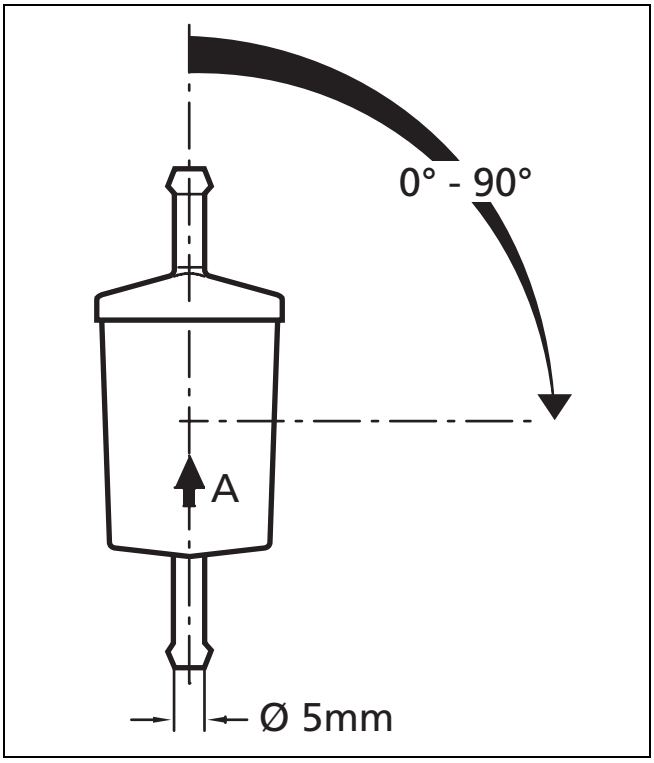

Figure 26: Fuel filter

9. Combustion Air Supply

Under no circumstances may the combustion air be taken from areas occupied by people. The combustion air intake opening must not point in the direction of travel. It must be located in that it cannot become clogged with dirt or snow and cannot suck in splashing water.

IMPORTANT!
The combustion air must be extracted using a combustion air line from a position that is as cool as possible and protected from splashing water.

The combustion air intake line (internal diameter at least 30 mm) may be 0.5 m to 5 m (1.6 ft to 16 ft) long with several bends totalling 360°. The minimum bending radius is 45 mm (1.75 inches).

The combustion air intake must not be routed above the exhaust outlet.

IMPORTANT!
If the combustion air intake line cannot be installed so that it slopes downwards, a water drain hole with a diameter of 4 mm (5/32") is to be made at its lowest point.

If the heater is installed in a general installation space near the vehicle's fuel tank, the combustion air must be taken in from the outside and the exhaust fumes discharged into the atmosphere. The openings must be splash-proof.

A ventilation opening measuring at least 6 cm^2 (1 $inch^2$) is required if the heater is installed in an enclosed box. The size of the ventilation opening must be increased accordingly if the temperature in the box exceeds the permitted ambient temperature of the heater (see Technical data).

10. Exhaust System

The exhaust pipe (internal diameter 38 mm) can be installed with a length of 0.5 m to 5 m (1.6 ft to 16 ft) and several bends totalling a maximum of 360° altogether. The minimum bending radius is 85 mm (3.35 inches).

The exhaust muffler is essential and must be installed near the heater.

The opening of the exhaust pipe must not point towards the front of the vehicle (see Figure 28).

The exhaust pipe opening must be located so that it cannot become clogged with snow and mud.

Rigid pipes of unalloyed or alloyed steel with a minimum wall thickness of 1.0 mm or flexible piping of alloyed steel only must be used as exhaust line. The exhaust pipe is secured to the muffler using an approved muffler clamp. See Figure 28 for details. See the statutory regulations for other requirements.

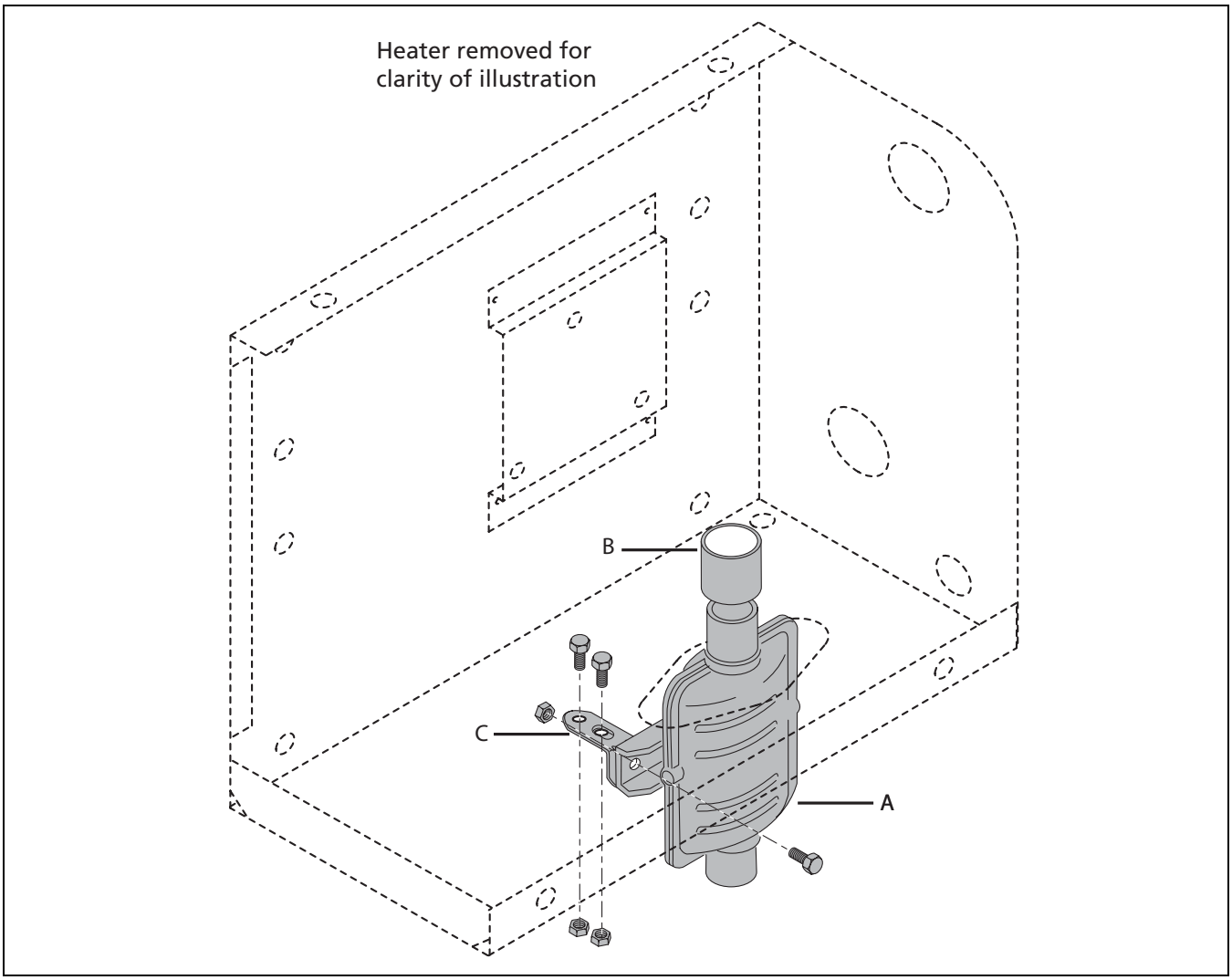

Figure 27: Exhaust muffler installation - enclosure kit only

- **A.** Muffler
- **B.** coupler (between heater and muffler)
- **C.** "L" bracket

The exhaust muffler is essential and must be installed near the heater. The exhaust muffler is secured to the heater using a coupler between the heater and muffler and a bracket fastened to the underside of the enclosure. See Figure 27 for details.

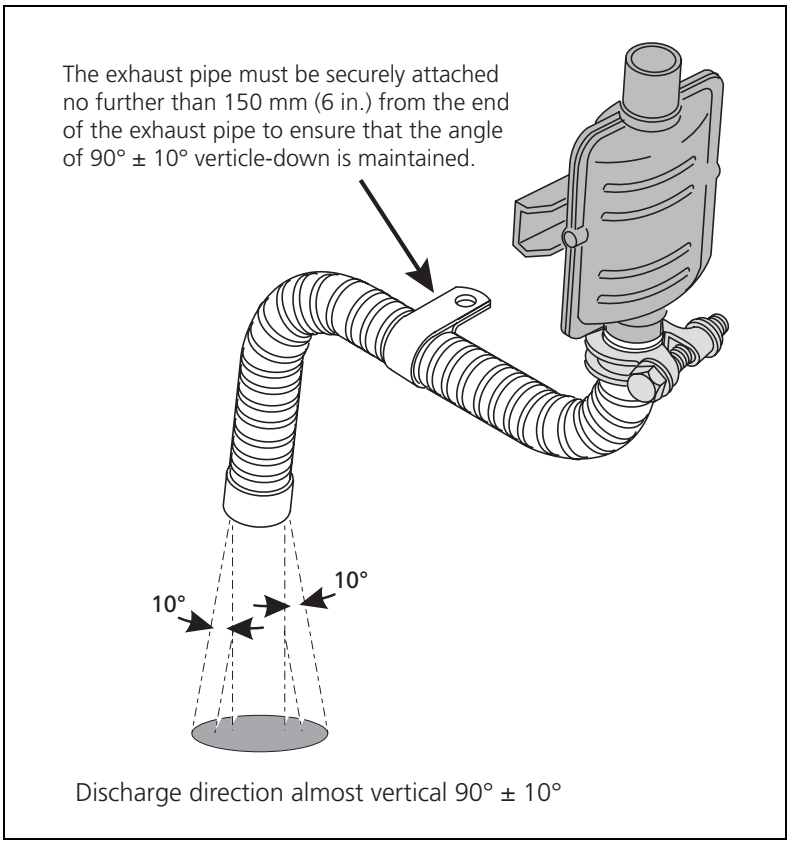

Figure 28: Exhaust pipe termination

IMPORTANT!
If the exhaust line cannot be installed so that it slopes downwards at all points, a water drain hole with a diameter of 4 mm (5/32”) is to be made at its lowest point to allow condensate to drain.

11. Electrical Connections

11.1 Power / Control Harness Connections

Ideally, the heater power supply should be directly from the vehicle's batteries or main buss-bar.

The heater control unit is equipped with low voltage protection. It is imperative that the vehicle batteries be kept in good condition for optimal heater operation.

For sleeper and engine heating applications, Webasto recommends a four battery system for best results.

A weather sealed fuse holder is to be fitted to protect the heater (supplied with the power / control harness).

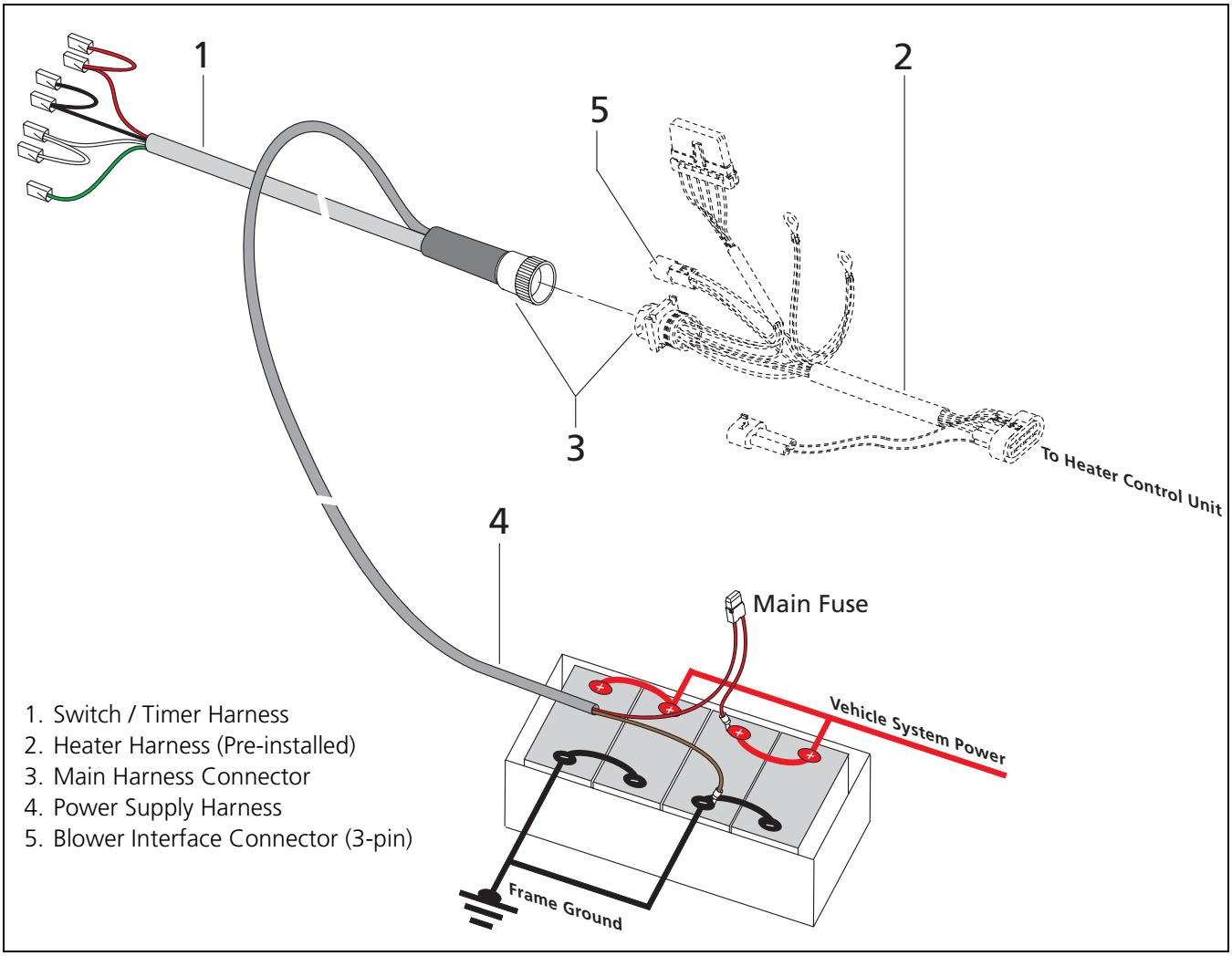

Figure 29: Power and control harness assembly

A. Route item 1 into the vehicle cab in the area where the switch or timer is to be installed.

B. Route item 4 to vehicle battery box and connect to batteries as shown in Figure 29. Brown wire to ground, red wire with fuse holder to positive. Ensure battery connections are clean and protected with an anti-corrosive compound.

C. Item 3 (main connector) should be left unconnected until all electrical components are installed and heater is ready for the initial start-up.

11.2 Connecting the Controls

The heater can be switched on and off using the following Webasto controls:

- Switch, see circuit diagrams in Figures 30 and 32.
- Timer, see circuit diagrams in Figures 31 and 33.

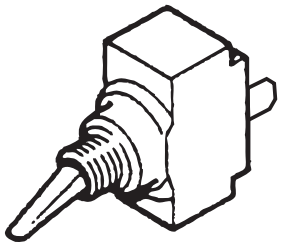

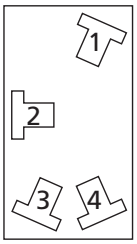

Heater Control Harness Connection Using a 12 or 24 Volt Switch

1. White (Ground)
2. Red (Power)
3. Black (On signal)
4. Green (Operation indication)

Figure 30: Toggle switch

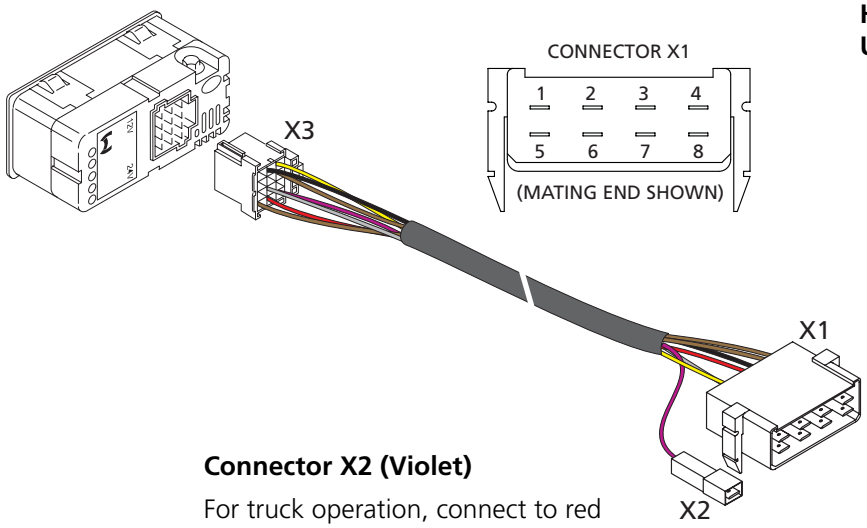

Heater Control Harness Connection Using 1531 Comfort Timer

1. Red (Power)
2. Not Used
3. Green (Operation indication)
4. Optional (Dash lights)
5. White (Ground)
6. Black (On signal)

Connector X2 (Violet)

For truck operation, connect to red jumper of heater control harness.

For Coach, Transit and School Bus operation, connect to ignition source.

Figure 31: 7-Day, 3 Program Comfort Timer model 1531

⚠CAUTION ***All the cables and wires that are not required must be insulated against accidental shorting or grounding.***

12. Circuit Diagrams

12.1 Thermo 90 ST Circuit Diagram Legend

① Digital timer P2:
Connection X14 to Red jumper of switch harness results in continuous operation with immediate heating (recommended for trucks requiring sleeper heating)

Connection X14 to vehicle ignition connection results in variable heating duration that can be programmed (10 min. to 120 min.); default setting 120 min. when ignition key is switched off. (Recommended for School bus, Coach and Transit vehicles.)

② Optional connection to vehicle instrumentation panel lighting circuit.

The following Table applies to Figures 32 and 33.

Item	Designation	Comment
A1	Heater	
A2	Control module	
B1	Flame sensor	
B2	Temperature sensor	
B3	Temperature limiter/ Overheating guard	
B4	Room thermostat	
BT	Battery	Vehicle battery
DS	Illuminated toggle	Operating indicator (in item S1)
E	Glow plug	
F1	Fuse 10 A	ATM mini flat fuse
F2	Fuse 5 A	ATM mini flat fuse
F3	Fuse 20 A	ATM mini flat fuse
H1	"Heating" symbol in the display	Operating indicator (in item P2)
H3	Symbol light	Light (in item P2)
H6	Red LED	Immediate heat button light, ready indicator, switch-on control (in item P2)
K1	Relay	Vehicle fan interface harness option
M1	Motor	Combustion air fan
M2	Motor	Circulating pump
P2	Digital timer 1531	For programmed operation
S1	Toggle switch	ON/OFF
X1	Plug connector, 4-pin	To item A2
X2	Plug connector, 2-pin	To item A2
X3	Plug connector, 2-pin	To item A2
X4	Plug connector, 2-pin	To item A2
X5	Plug connector, 2-pin	To item A2
X6	Plug connector, 2-pin	To item A2
X7	Plug connector, 2-pin	To item A2
X8	12-pin plug connection	To item A2
X9	12-pin plug connection	To item P2
X10	Plug connector, 2-pin	W-Bus Diagnostics
X11	Plug connector, 2-pin	To Y1
X12	9-pin plug connection	Power/Control Harness
X13	Plug connector, 8-pin	To X9 of item P2
X14	Plug connector, 1-pin	To pin-10 of item X9 (see ①)
X15	Plug connector, 3-pin	To optional blower interface systems (Sleeper Pak™)
X16	5-pin relay socket	Vehicle fan interface harness option
Y1	Metering pump	Fuel pump for heater

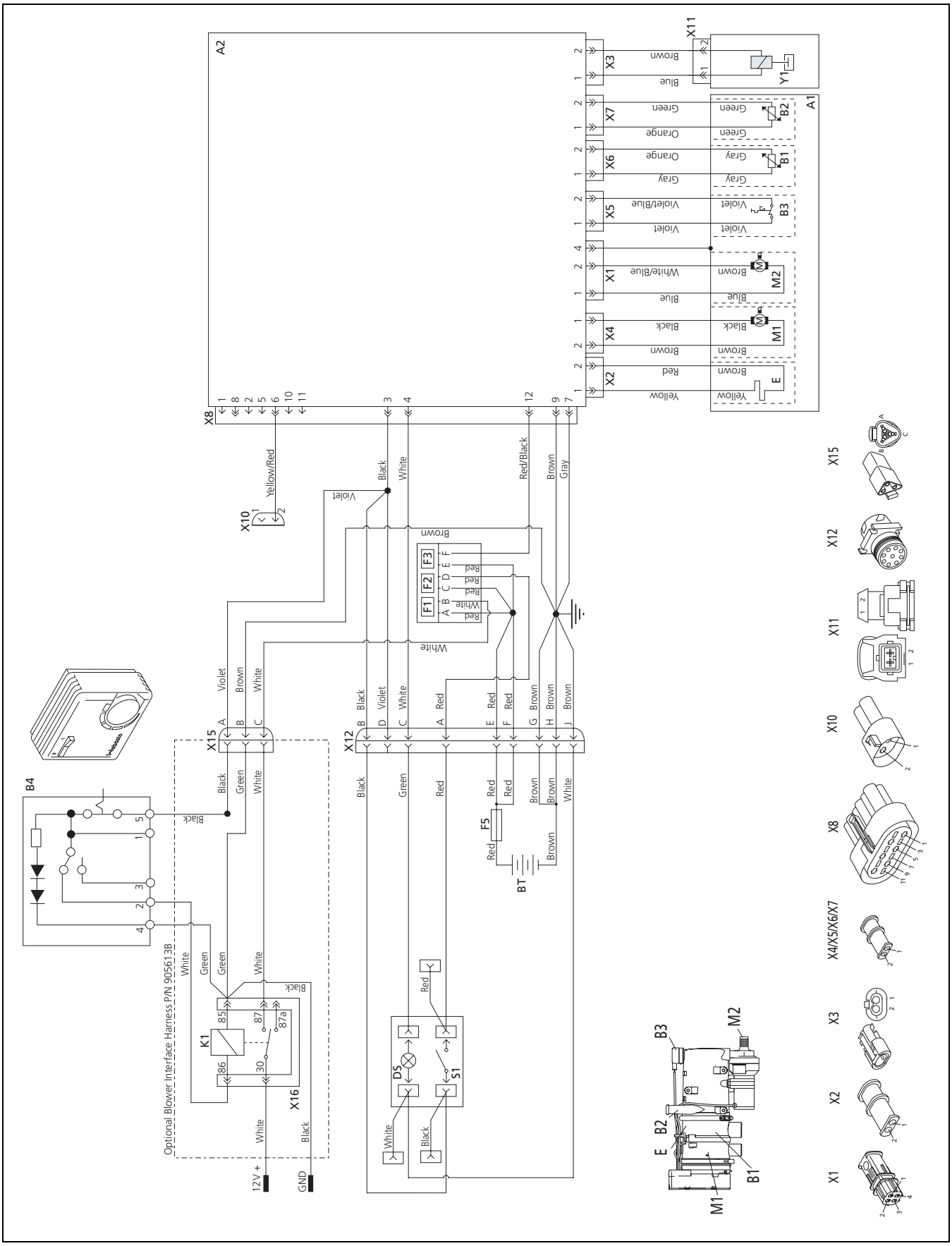

Figure 32: Thermo 90 ST with On/Off switch - connection diagram (Includes optional blower interface harness)

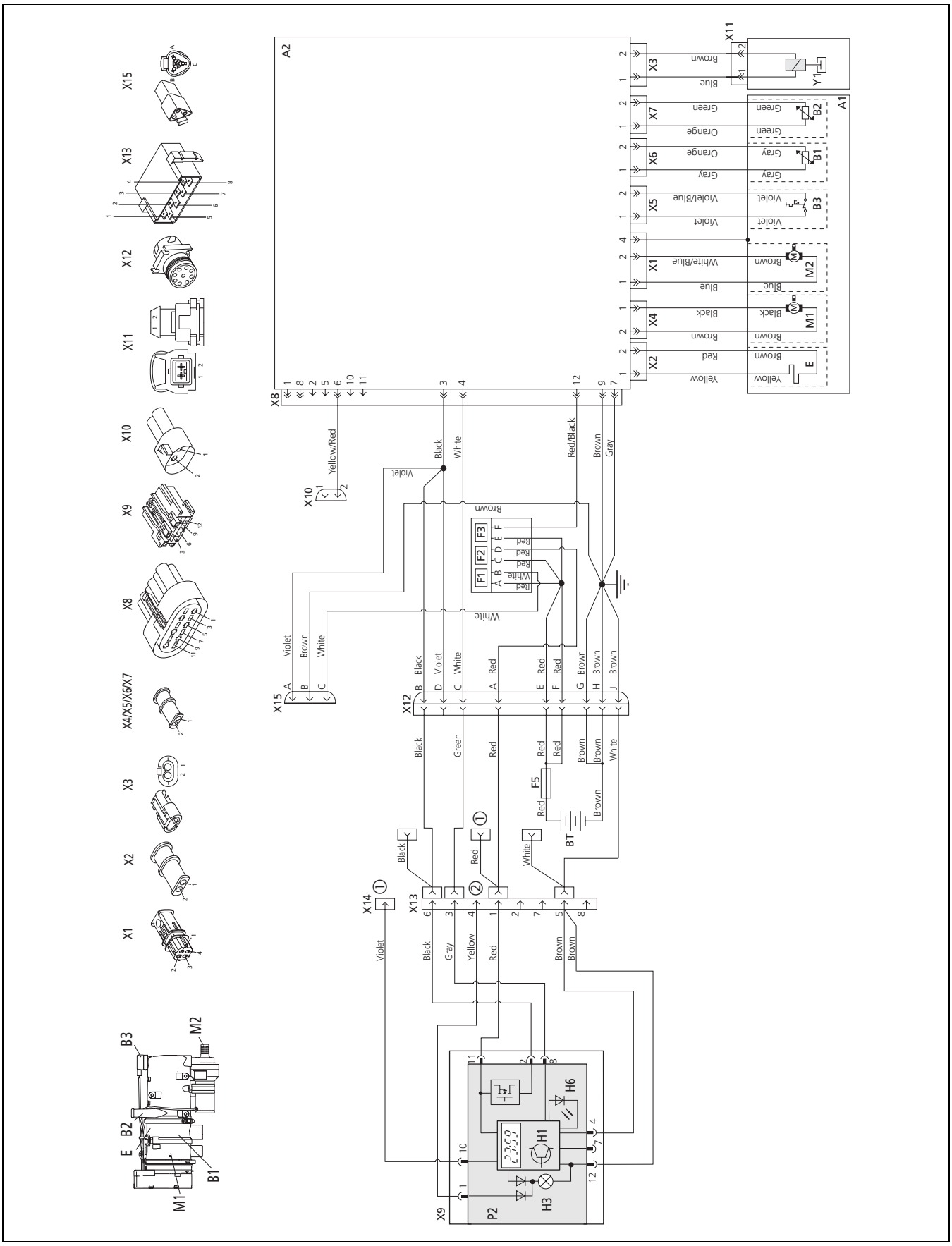

Figure 33: Thermo 90 ST with 7-day digital timer model 1531 - connection diagram

13. Initial Start-up

IMPORTANT!
Refer to the safety instructions in the operating and maintenance instructions. The operating and maintenance instructions must be read through without fail before starting the heater.

NOTE:
As a result of the low fuel consumption the heater must be switched on several times to fill the fuel line and prime the system.

After you have installed the heater, bleed the water system and the fuel supply system carefully. Follow the instructions supplied by the vehicle manufacturer for this purpose.

Conduct a trial of the heater to check all the water and fuel connections for leaks and to ensure that they are secure.
If the heater suffers a fault during operation, the fault must be located and remedied.

14. Troubleshooting

14.1 General Information

The control unit continuously monitors the heater operation. The control unit identifies errors on individual heater components and faults during operation. Should the control unit experience component errors and operational faults, the heater will be shut down.

14.2 Fault Lock-out

Fuel is supplied for max. 240 seconds if the flame does not start to burn.

Fuel is supplied for max. 240 seconds if the flame goes out during operation.

The fuel supply is shut off if the system overheats (temperature limiter is tripped). If the system overheats the button on the temperature limiter must be reset.

Once the cause of the fault has been eliminated, the fault lock-out is cancelled by switching the heater off and on again.

If the under-voltage protection switches off the system

	Thermo 90 ST
12 Volt	10.V – 0.5V
24 Volt	21V – 1V

for longer than 20 seconds, the fuel supply is interrupted.

14.3 Diagnostic after a Fault Lock-out for the Thermo 90 ST

Check the fuses and plug connectors.

14.3.1 Version with switch

If the system is operated with a switch, the nature of the fault is indicated by a flashing code on an indicator light (toggle of switch) during the run-on time of the heater.

After five short signals, count the long flashes:

1x No start (after 2 attempts to start)

2x Flame failure

3x Under-voltage or over-voltage

4x Premature flame recognition

5x Flame sensor interrupt or flame sensor short-circuit

6x Temperature sensor interrupt or temperature sensor short-circuit

7x Metering pump interrupt or metering pump short-circuit

8x Blower motor interrupt or blower motor short-circuit or blower motor incorrect speed

9x Glow plug interrupt or glow plug short-circuit

10x Overheating

11x Circulating pump interrupt or circulating pump short-circuit

14.3.2 Version with timer

If the system is equipped with a digital timer, a fault message appears on the display of the timer after a fault occurs:

F 01 No start (after 2 attempts to start)

F 02 Flame failure

F 03 Under-voltage or over-voltage

F 04 Premature flame recognition

F 05 Flame sensor interrupt or flame sensor short-circuit

F 06 Temperature sensor interrupt or temperature sensor short-circuit

F 07 Metering pump interrupt or metering pump short-circuit

F 08 Blower motor interrupt or blower motor short-circuit or blower motor incorrect speed

F 09 Glow plug interrupt or glow plug short-circuit

F 10 Overheating

F 11 Circulating pump interrupt or circulating pump short-circuit

15. Technical Data

Except where limit values are specified, the technical data refer to the usual heater tolerances of ±10% at an ambient temperature of +20 °C (68 °F) and at the nominal voltage and conditions.

15.1 Electrical Components:

The control module, motors for combustion air blower and circulating pump, ceramic glow pin, metering pump, switch and timer are designed for either 12 V or 24 V.

The temperature limiter, temperature sensor and flame sensor are identical on 12V and 24V heaters.

15.2 Fuel for Thermo 90 ST (Gasoline):

The fuel specified by the vehicle manufacturer must be used. Both leaded and unleaded fuel may be used.

15.3 Fuel for Thermo 90 ST (Diesel):

The diesel fuel specified by the vehicle manufacturer must be used. Heating oil may also be used as long as it complies to the normal quality available on the North American market.

We know of no negative influences due to additives.

If fuel is extracted from the vehicle's tank, follow the additive instructions issued by the vehicle manufacturer.

If you change to low-temperature fuel, the heater must be operated for approximately 15 minutes so that the fuel system is filled with the new fuel.

The Thermo 90 ST heater is also licensed for use with PME (bio-diesel), which complies with DIN EN 14214.

Heater	Operation	Thermo 90 ST Gasoline	Thermo 90 ST Diesel
EC licensing symbol		e1*2001/56*0019*__	e1*2001/56*0019*__
Model		Water heater with Ferro-tec technology	
Heat output	Max. regulating range	2.0 kW – 7.6 kW	9.1 kW 1.8 kW – 7.6 kW
Fuel		Gasoline	Diesel
Fuel consumption	Max. regulating range	0.25 l/h – 1.0 l/h	1.1 l/h 0.19 l/h – 0.9 l/h
Rated voltage		12 V	12 or 24 V
Operating voltage range		10 ... 15 V	10 ... 15 or 20 ... 30 V
Nominal power consumption with circulation pump (without vehicle fan)	Max. regulating range	37 W - 83 W	90 W 37 W - 83 W
Max. ambient temperature: Heater: - Operation - Storage Control module: - Operation - Storage Metering pump: - Operation - Storage Max. operating pressure (heat medium)	 Max.	 -40° ... +110 °C (90 °C with control module installed on the heater) -40° ... +110 °C (90 °C with control module installed on the heater) -40° ... +75 °C -40° ... +85 °C -40° ... +20 °C -40° ... +40 °C -40° ... +85 °C 2.0 bar	 -40° ... +85 °C -40° ... +85 °C
Capacity of the heat exchanger		0.15 l	
Max. combustion air intake temperature		+40 °C	
Minimum capacity of the system		6.00 l	
Coolant pump delivery rate against 0.15 bar		1650 l/h	
CO_2 in the exhaust gases (normal function range)	Max.	10 ... 12.0% by volume	
CO_2 - adjustment values at approx. + 20 °C and geographic altitude above sea level	Max.	0 m 500 m 1000 m 10% 10.6% 11.3%	
Heater dimensions (tolerance ± 3 mm) * Control module installed on the heater		L 307 (352*) mm W 131 mm H 232 mm	
Weight		4,8 kg	

Table 1: Technical Data - Metric Measurement

Heater	Operation	Thermo 90 ST Gasoline	Thermo 90 ST Diesel
EC licensing symbol		e1*2001/56*0019*__	e1*2001/56*0019*__
Model		Water heater with Ferro-tec technology	
Heat output	Max. regulating range	31000 BTU/hr 3830 BTU/hr – 26000 BTU/hr	31000 BTU/hr 6100 BTU/hr – 26000 BTU/hr
Fuel		Gasoline	Diesel
Fuel consumption	Max. regulating range	0.29 Gal/hr 0.066 Gal/hr – 0.264 Gal/hr	0.29 Gal/hr 0.05 Gal/hr – 0.0237 Gal/hr
Rated voltage		12 V	12 or 24 V
Operating voltage range		10 ... 15 V	10 ... 15 or 20 ... 30 V
Nominal power consumption with circulation pump (without vehicle fan)	Max. regulating range	90 W 37 W - 83 W	90 W 37 W - 83 W
Max. ambient temperature: Heater: - Operation - Storage Control module: - Operation - Storage Metering pump: - Operation - Storage Max. operating pressure (heat medium)	 Max.	 -40° ... +230 °F (194 °F with control module installed on the heater) -40° ... +230 °F (194 °F with control module installed on the heater) -40° ... +167 °F -40° ... +185 °F -40° ... +68 °F -40° ... +104 °F -40° ... +185 °F 29.0 PSI	 -40° ... +185 °F -40° ... +185 °F
Capacity of the heat exchanger		0.158 quart	
Max. combustion air intake temperature		+104 °F	
Minimum capacity of the system		6.34 quarts	
Coolant pump delivery rate against 2.17 PSI		435.8 Gal/hr	
CO_2 in the exhaust gases (normal function range)	Max.	10 ... 12.0% by volume	
CO_2 - adjustment values at approx. + 68 °F and geographic altitude above sea level	Max.	0 ft 1640.5 ft 3280.8 ft 10% 10.6% 11.3%	
Heater dimensions (tolerance ± 0.118 in.) * Control module installed on the heater		L 12.08 (13.85*) inch W 5.157 inch H 9.13 inch	
Weight		10.58 lb.	

Table 2: Technical Data - US Standard Measurement

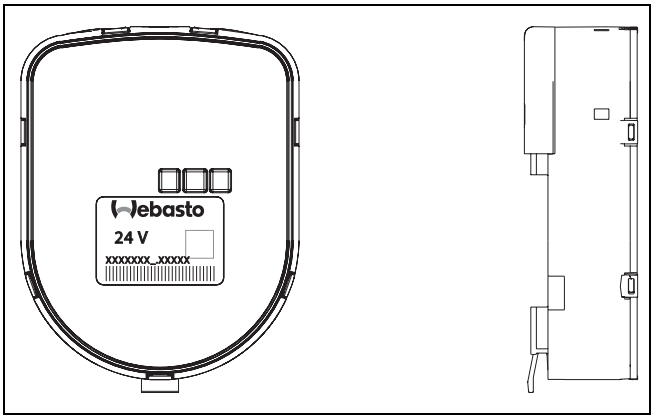

Figure 34: Thermo 90 ST control module, arbitrary installation position

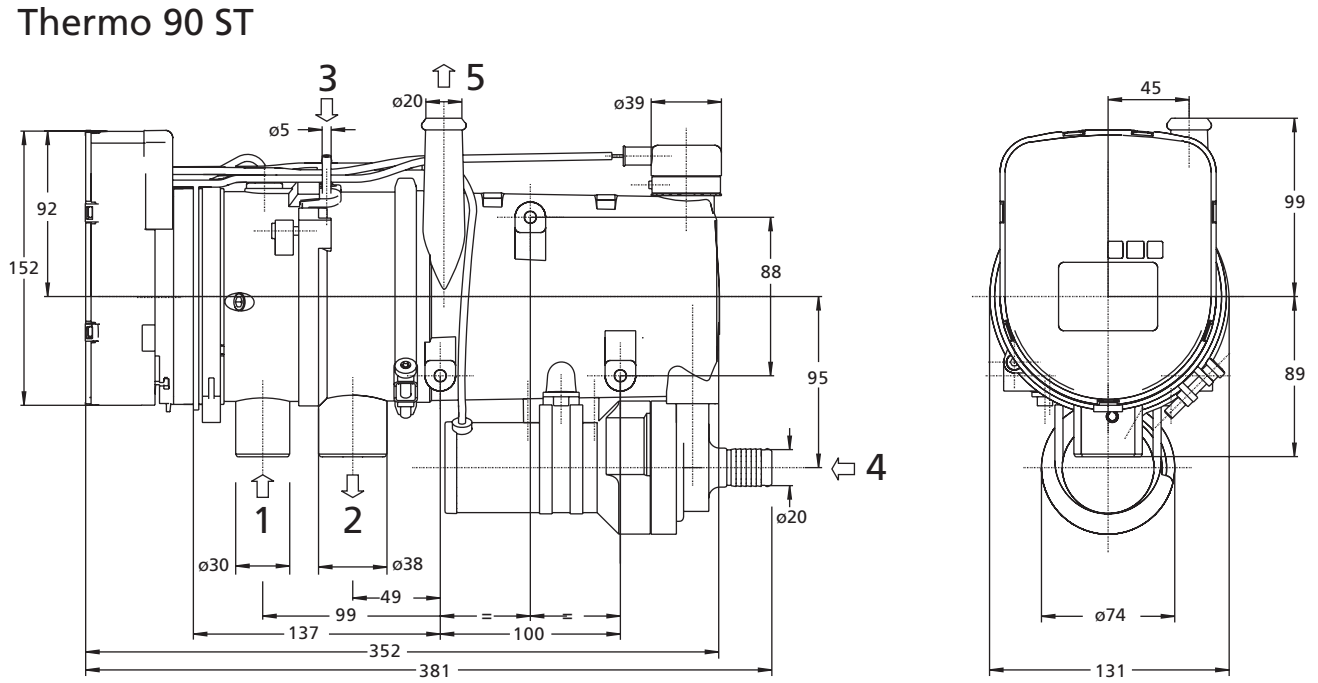

1 Combustion air intake
2 Exhaust outlet
3 Fuel inlet pipe
4 Coolant inlet
5 Coolant outlet

Figure 35: Dimensions of the Thermo 90 ST Heater

16. Additional Installation Accessories

Sleeper Pack - complete auxiliary heat exchanger kit.

P/N 905670

Sleeper Pack - OEM HVAC to Webasto Coolant Heater Interface Kits.

P/N 906558A - Kenworth AeroCab built after September 1996

P/N 906668 - Kenworth Studio Sleeper built after September 1996

P/N 906582 - Peterbilt with Unibilt Sleepers except model 387

P/N 906543 - Freightliner Century Class, Freightliner Classic-FLD, Kenworth Modular Sleeper Box, Kenworth T-2000, Kenworth AeroCab and Studio Sleeper built before September 1996, Mack CL, CH, Vision, Peterbilt model 387, Sterling - all, Volvo VN, WIA, Western Star - all.

Call your Webasto representative for information or questions regarding “Sleeper Pack” systems.

Feel the drive

Webasto Product N.A., Inc.

15083 North Road
Fenton, MI 48430

Technical Assistance Hotline
USA: (800) 860-7866
Canada: (800) 667-8900

www.techwebasto.com
www.webasto.us

Org. 01/2007 Rev. 05/2007 P/N 5000994A